WOODWARD

Product Manual 26845
(Revision F, 05/2023)
Original Instructions

R-Series Actuator

Actuator Models R-11, R-30, and R-120
General Market

Installation and Operation Manual

General Precautions

Read this entire manual and all other publications pertaining to the work to be performed before installing, operating, or servicing this equipment.

Practice all plant and safety instructions and precautions.

Failure to follow instructions can cause personal injury and/or property damage.

Revisions

This publication may have been revised or updated since this copy was produced. The latest version of most publications is available on the Woodward website.

http://www.woodward.com

If your publication is not there, please contact your customer service representative to get the latest copy.

Proper Use

Any unauthorized modifications to or use of this equipment outside its specified mechanical, electrical, or other operating limits may cause personal injury and/or property damage, including damage to the equipment. Any such unauthorized modifications: (i) constitute "misuse" and/or "negligence" within the meaning of the product warranty thereby excluding warranty coverage for any resulting damage, and (ii) invalidate product certifications or listings.

Translated Publications

If the cover of this publication states "Translation of the Original Instructions" please note:

The original source of this publication may have been updated since this translation was made. The latest version of most publications is available on the Woodward website.

www.woodward.com/publications

Always compare with the original for technical specifications and for proper and safe installation and operation procedures.

If your publication is not on the Woodward website, please contact your customer service representative to get the latest copy.

Revisions— A bold, black line alongside the text identifies changes in this publication since the last revision.

Manual 26845

Contents

Illustrations and Tables

Warnings and Notices

Important Definitions

This is the safety alert symbol used to alert you to potential personal injury hazards. Obey all safety messages that follow this symbol to avoid possible injury or death.

- **DANGER** - Indicates a hazardous situation, which if not avoided, will result in death or serious injury.
- **WARNING** - Indicates a hazardous situation, which if not avoided, could result in death or serious injury.
- **CAUTION** - Indicates a hazardous situation, which if not avoided, could result in minor or moderate injury.
- **NOTICE** - Indicates a hazard that could result in property damage only (including damage to the control).
- **IMPORTANT** - Designates an operating tip or maintenance suggestion.

WARNING

Lockout/Tagout LOTO

Ensure that personnel are fully trained on LOTO procedures prior to attempting to replace or service an R-Series on a "live" running engine. All safety protective systems (overspeed, over temperature, overpressure, etc.) must be in proper operational condition prior to the start or operation of a running engine. Personnel should be equipped with appropriate personal protective equipment to minimize the potential for injury due to release of hot hydraulic fluids, exposure to hot surfaces and/or moving parts, or any moving parts that may be activated and are located in the area of control of the R-Series.

WARNING

Overspeed / Overtemperature / Overpressure

The engine, turbine, or other type of prime mover should be equipped with an overspeed shutdown device to protect against runaway or damage to the prime mover with possible personal injury, loss of life, or property damage.

The overspeed shutdown device must be totally independent of the prime mover control system. An overtemperature or overpressure shutdown device may also be needed for safety, as appropriate.

WARNING

Personal Protective Equipment

The products described in this publication may present risks that could lead to personal injury, loss of life, or property damage. Always wear the appropriate personal protective equipment (PPE) for the job at hand. Equipment that should be considered includes but is not limited to:

- **Eye Protection**
- **Hearing Protection**
- **Hard Hat**
- **Gloves**
- **Safety Boots**
- **Respirator**

Always read the proper Material Safety Data Sheet (MSDS) for any working fluid(s) and comply with recommended safety equipment.

WARNING

Start-up

Be prepared to make an emergency shutdown when starting the engine, turbine, or other type of prime mover, to protect against runaway or overspeed with possible personal injury, loss of life, or property damage.

⚠WARNING

On- and Off-Highway Mobile Applications:

Unless Woodward's control functions as the supervisory control, customer should install a system totally independent of the prime mover control system that monitors for supervisory control of engine (and takes appropriate action if supervisory control is lost) to protect against loss of engine control with possible personal injury, loss of life, or property damage.

NOTICE

Battery Charging Device

To prevent damage to a control system that uses an alternator or battery-charging device, make sure the charging device is turned off before disconnecting the battery from the system.

Electrostatic Discharge Awareness

NOTICE

Electrostatic Precautions

Electronic controls contain static-sensitive parts. Observe the following precautions to prevent damage to these parts:

- **Discharge body static before handling the control (with power to the control turned off, contact a grounded surface and maintain contact while handling the control).**
- **Avoid all plastic, vinyl, and Styrofoam (except antistatic versions) around printed circuit boards.**
- **Do not touch the components or conductors on a printed circuit board with your hands or with conductive devices.**

To prevent damage to electronic components caused by improper handling, read and observe the precautions in Woodward manual *82715*, *Guide for Handling and Protection of Electronic Controls, Printed Circuit Boards, and Modules*.

Follow these precautions when working with or near the control.

1. Avoid the build-up of static electricity on your body by not wearing clothing made of synthetic materials. Wear cotton or cotton-blend materials as much as possible because these do not store static electric charges as much as synthetics.
2. Touch your finger to a grounded surface to discharge any potential before touching the control, smart valve, or valve driver, or installing cabling connectors. Alternatively, ESD mitigation may be used as well: ESD smocks, ankle or wrist straps and discharging to a reference grounds surface like chassis or earth are examples of ESD mitigation.
    - ESD build up can be substantial in some environments: the unit has been designed for immunity deemed to be satisfactory for most environments. ESD levels are extremely variable and, in some situations, may exceed the level of robustness designed into the control. Follow all ESD precautions when handling the unit or any electronics.
        - I/O pins within connectors have had ESD testing to a significant level of immunity to ESD, however do not touch these pins if it can be avoided.
            - Discharge yourself after picking up the cable harness before installing it as a precaution.
        - The unit is capable of not being damaged or improper operation when installed to a level of ESD immunity for most installation as described in the EMC specifications. Mitigation is needed beyond these specification levels.

IMPORTANT

External wiring connections for reverse-acting controls are identical to those for direct-acting controls.

Regulatory Compliance

European Union Compliance for CE Marking:
These listings are limited only to those units bearing the CE Marking.

Units bearing the CE Mark in addition to the marking indicating Class I, Zone 2 are acceptable for use in EU Hazardous Locations.

EMC Directive: Directive 2014/30/EU of the European Parliament and of the Council of 26 February 2014 on the harmonization of the laws of the Member States relating to electromagnetic compatibility (EMC) and all applicable amendments.

ATEX Directive: Directive 2014/34/EU on the harmonisation of the laws of the Member States relating to equipment and protective systems intended for use in potentially explosive atmospheres.

R-Series
- Zone 2, Category 3, Group II G, Ex nA IIC T3 Gc

R-Series with Active Cooling
- Zone 2, Category 3, Group II G, Ex nA IIC T3 Gc See Table A for special conditions

Restriction of Hazardous Substances (RoHS): Directive 2011/65/EC of the European Parliament and the Council of 8 June 2011 on the restriction of the use of certain hazardous substances in electrical and electronic equipment
Exemption in use: 6 (c), 7 (a), 7(c)-I

Other European Union Compliance:
Compliance with the following European Union Directives or standards does not qualify this product for application of the CE Marking:

Machinery Directive: Compliant as partly completed machinery with Directive 2006/42/EC of the European Parliament and the Council of 17 May 2006 on machinery.

United Kingdom Compliance for UKCA Marking:
These listings are limited only to those units bearing the UKCA Marking.

Units bearing the UKCA Mark in addition to the marking indicating Class I, Zone 2 are acceptable for use in UKEX Hazardous Locations.

EMC: S.I. 2016 No. 1091: Electromagnetic Compatibility Regulations 2016 and all applicable amendments.

UKEX: S.I. 2016 No.1107: Equipment and Protective Systems Intended for use in Potentially Explosive Atmospheres Regulations 2016

Hazardous Substances and Packaging: S.I. 2020 No. 1647: The Hazardous Substances and Packaging (Legislative Functions and Amendments) (EU Exit) Regulations 2020
Exemption in use: 6 (c), 7 (a), 7(c)-I

Other UKCA Compliance:
Compliance with the following UKCA regulations or standards does not qualify this product for application of the UKCA Marking:

Machinery: S.I. 2008 No. 1597: Supply of Machinery (Safety) Regulations 2008

North American Compliance:
These listings are limited only to those units bearing the CSA identification.

Units bearing only the CSA identification are restricted for use in Ordinary Locations only in North America.

Units bearing the CSA identification in addition to the marking indicating Class I, Div 2 or Class I, Zone 2 are acceptable for use in North American Hazardous Locations.

CSA: **R-Series:**
CSA Certified for Class I, Division 2, Groups A, B, C, & D, T3 at 105 °C Ambient. For use in Canada and the United States.

CSA Certified for Class I, Zone 2, Category 3, Group II G, AEx nA IIC T3 Gc For use in Canada and the United States.

R-Series with Active Cooling:
CSA Certified for Class I, Division 2, Groups A, B, C, & D, T3 see Table A for special conditions. For use in Canada and the United States.

CSA Certified for Class I, Zone 2, Category 3, Group II G, AEx nA IIC T3 Gc For use in Canada and the United States. See Table A for special conditions. Certificate 160584-2637609

Marine Certifications:
Contact Woodward for Marine Certified Part Numbers.

American Bureau of Shipping: 2021 Steel Vessel Rules Part_4 4-9-8 for Type Approval Table 1&2 Type Test for Control, Monitoring, and Safety equipment
Part 4: Vessel Systems and Machinery
Chapter 9: Automation
Section 8: Equipment

Bureau Veritas: Bureau Veritas Rules for the Classification of Steel ships, Offshore Units, Naval Ships and Yachts
EC Code: 43

Det Norske Veritas: Det Norske Veritas – Class guideline — DNVGL-CG-0339. Edition December 2019 environmental test specification for electrical, electronic and programmable equipment and systems

Temp. Class	**D**
Humidity Class	**B**
Vibration Class	**B**
EMC Class	**A**
Enclosure Class	**B**

Notes:
See Tables 1, 2 and 3 in the standard for environmental class definitions and applicable tests for each environmental class

Lloyd's Register of Shipping: Lloyd's Register of Shipping – Type Approval System, Test Specification No. 1 December 2020, Notice No. 1 to Test Specification No. 1 December 2020.

ENV1	Yes
ENV2	Yes
ENV3	Yes
ENV4	Yes
ENV5	No

Notes:
See Table 1.1.1 in the standard for Environmental Category (ENV) definitions

See Table 1.1.2 in the standard to determine which tests are applicable for each ENV category

Korean Registry of Shipping: Pt. 6, Ch. 2, Art. 301 of the Rules for Classification, Steel Ships.

Class NK: Guidance for the Approval and Type Approval of Materials and Equipment for Marine Use (Part 7, Chapter 1) IACS UR E10 Rev. 7.

RINA Rules: RINA Rules for the Classification of Ships. Part C – Machinery, Systems and Fire protection. Ch. 3, Section 6, Table 1. (2021)

Russian Maritime Register of Shipping: Part XI and XV of Rules for the Classification and Construction of Sea-Going Ships, 2021 and Section 12 Part IV of Rules for Technical Supervision during Construction of Ships and Manufacture of Materials and Products for Ships, 2021.

Other marine agencies available upon request.

Special Conditions for Safe Use

Wiring must be in accordance with North American Class I, Division 1 or 2, or European Zone 1, Category 2 or Zone 2, Category 3 wiring methods as applicable, and in accordance with the authority having jurisdiction.

Field wiring must be suitable for at least T_{amb}+10°C.

Connect external safety ground terminal to earth ground.

Compliance with the Machinery Directive 2006/42/EC noise measurement and mitigation requirements is the responsibility of the manufacturer of the machinery into which this product is incorporated.

It is the responsibility of the end user to conduct and document a formal systems level Risk Analysis. The Risk Analysis shall evaluate essential health and safety requirements set forth by local jurisdictional authorities.

For Zone 2 rating compliance, customer must use the region's appropriate certified gland that meets the requirements of the Local Authority having jurisdiction. In addition, Woodard seal plugs p/n 1223-1557 (Sealcon HM-20-BR-V) must be installed in all holes that do not have a gland plug. Finally, apply threadlocker Loctite 246 to the threads that install in the electronic housing (M20 threads).

For IECEx compliance, customer is responsible for purchasing the appropriate IECEx rated gland fitting Water temperature must not exceed 88 °C for any active-cooling application. To avoid damage to the unit, stay within the ranges in Table A-1, which shows maximum application temperature (T_{amb}) and corresponding water temperature (T_{H2O}). When the engine is shut down, the T_{H2O} must be continued to be applied until the T_{amb} falls below 105 °C.

Table A. Maximum Water Temperature

T_{amb} (°C)	T_{H2O} (°C)
140	88.0
145	83.6
150	79.2
155	74.8
160	70.4
165	66.0

WARNING

Overspeed / Overtemperature / Overpressure

The engine, turbine, or other type of prime mover should be equipped with an overspeed shutdown device to protect against runaway or damage to the prime mover with possible personal injury, loss of life, or property damage.

The overspeed shutdown device must be totally independent of the prime mover control system. An overtemperature or overpressure shutdown device may also be needed for safety, as appropriate.

Quick Start Guide

This installation checklist has been provided to give you the most efficient way to quickly and properly install the R-Series actuator. Detailed information for each step can be found in the “Manual Reference” section given with each step in the checklist.

Installation Step	Description	Manual Reference	Completed (Y/N)
1	Coupling/linkage inertia is within product specification	Chapter 2 - Linkage	
2	Shaft interface does not have excessive tolerance (slip/slop) that impedes position accuracy	Chapter 2 - Linkage	
3	Actuator torque is sufficient for the application based on the torque sizing specifications (torque level and duration)	Appendix D – General	
4	Actuator location meets environmental specifications	Chapter 1 – General Information Appendix D – Environmental	
5	Actuator I/O is sufficient	Appendix D – Inputs and Outputs	
6	Verify actuator is using the latest software	Chapter 1 – General Information	
7	Actuator is oriented so it is not used as a step or lifting device	Chapter 2 – Mechanical Installation	
8	Output shaft connections are aligned to prevent stress (side load)	Chapter 2 – Actuator and End Device Alignment	
9	Actuator is securely mounted	Chapter 2 – Mechanical Installation	
10	Mounting bolts are torqued to specification	Chapter 2 – Dimensions	
11	Ensure proper wire gauge, length, and type is used for power and communication	Chapter 3 – Shielded Wiring Chapter 3 – General	
12	Ensure the housing and harness are kept away from coil primary wires, secondary leads, and other EMI sources.	Chapter 3 – Electrical Connections Chapter 3 – Wire Routing	
13	Ensure the wiring harness is installed properly (heat, sharp edges, drip loops)	Chapter 3 – Electrical Connections	
14	Ensure the actuator is grounded/isolated properly	Chapter 2 – R-Series Grounding	

Quick Start Guide (cont'd.)

Installation Step	Description	Manual Reference	Completed (Y/N)
15	Ensure proper fusing	Chapter 3 – Description of Electrical I/O	
16	Ensure power delivery to the actuator meets specifications (may need capacitor/diode)	Chapter 3 – Description of Electrical I/O	
17	Ensure the power supply voltage and currents are within specification	Chapter 3 – Description of Electrical I/O	
18	Manually stroke actuator through full range of motion	Chapter 2 - Linkage	
19	Power up actuator and verify communications by commanding different positions	Chapter 3 – Description of Electrical I/O	
20	Determine the vibration profile at the actuator as installed and ensure that actuator's limits are not exceeded	Appendix C – Determining Device Vibration Levels Appendix D – Environmental	

Chapter 1.
General Information

Purpose and Scope

The purpose of this manual is to provide the necessary background information for applying the R-Series actuator to reciprocating engines. Topics covered include mechanical installation, electrical wiring, and troubleshooting. While this manual is primarily targeted at original equipment manufacturer (OEM) customers, OEMs themselves may find it useful to copy some of the information from this manual into their application user manuals.

This manual does not contain instructions for operation of the complete engine system. For engine or plant operating instruction, contact the plant-equipment manufacturer.

This manual applies to the R-Series position control models with software 5418-7415, 5418-7091, and 5418-6986. The software identification can be found using the Service Tool. It is displayed on the Identification screen (Software ID).

The following are updates provided in the latest software version, 5418-7415.

- CANopen functionality
- CANopen LSS services for identification, inquiry, and configuring the node ID
- Added J1939 DM3 message support
- Changed torque de-rating threshold to provide earlier indication of overtemp condition

The following are updates that were provided in software version 5418-7091.

- CANopen functionality added at prototype maturity level
- Discrete Out diagnostic updated to include high-side
- Display of actuator part number added to Service Tool

How to Use This Manual

The following summarizes how to install an R-Series actuator into a new or existing system:

- Unpack and inspect the hardware.
- Mount and wire the hardware following the procedures and recommendations in Chapters 2 and 3.
- Description of operation is provided in Chapter 4.
- Details of CAN implementation (CANopen and J1939) are provided in Chapter 5.
- Use the Service Tool to configure and setup the control following the procedures and recommendations in Chapters 6 and 7.
- Troubleshooting guidelines are provided in Chapter 8.
- Specifications are provided in the Appendix.
- J1939 device profiles and configuration examples are provided in Appendix A.

Intended Applications

The R-Series actuator is intended to be mounted on-engine for use in various industrial applications, including, but not limited to, stationary generator sets, gas compressors, steam turbines, and off-highway industrial gas, gasoline or diesel reciprocating engines. The device is effectively a positioner that accepts a desired position signal from another device in the system, such as a speed control, and drives to that position. Key environmental characteristics of these applications include extended industrial operating temperatures (–40 °C to +105 °C / –40 °F to +221 °F), Industrial EMC Requirements, and standard 24 V industrial operating voltages (18 to 32 VDC).

Introduction

The Woodward R-Series actuator is based on using a BLDC (Brushless DC) motor in conjunction with various size gear trains and a driver board to provide a family of actuators having various torque and response time capabilities.

The R-Series actuator can be commanded to a position via CAN, 4–20 mA, 0–200 mA, or PWM interfaces. A discrete output indicating device status (alarm/shutdown) is provided. In addition, given an on board position feedback device, the actual position is available to the system through a 4–20 mA analog position output signal.

Mounting of the actuator is model-specific. The R-11 and R-30 units are to be mounted utilizing threaded M8 holes at the base of the unit in conjunction with additional mounting points near the output shaft of the unit. The R-120 unit is to be mounted using the six threaded M8 holes at the base of the unit. More detail is included in chapter 2. The units are designed to operate in an on-engine environment and can therefore withstand high levels of vibration and temperature extremes. The details of these environmental limits can be found in the Environmental Specifications section in the Appendix.

- R-11 and R-30 actuators have a rotational travel of 73° ± 2° at the output shaft.
- The R-120 actuator has a rotational travel of 93° ± 2° at the output shaft.

Available Active Water Cooling Module

R-Series actuators with active water-cooling hardware can be selected to cool the actuator when the ambient temperature exceeds 105 °C.

Recommend operating conditions as below:

- Ambient air temperature: up to +165 °C Max
- Inlet cooling water temperature: up to +88 °C Max
- Pressure of cooling water: 60 psi Max
- pH of the cooling water: 8.5 to 10.0
- Flow rate of cooling water: 0.5 GPM Min (1.89L/min)

⚠WARNING

Thermal

Ambient air and cooling water temperatures must follow requirements as specified in the Regulatory Compliance Section, Special Conditions for Use, in order to avoid thermal damage to actuator.

⚠WARNING

Storage

Water cooling module must be drained to prevent damaging the module when subjected to freezing conditions.

Chapter 2.
Mechanical Installation

Introduction

This chapter provides instructions on how to mount and connect the R-Series actuator into a system. Hardware dimensions are provided to mount the device for specific applications.

⚠WARNING **External Fire Protection**	**External fire protection is not provided in the scope of this product. It is the responsibility of the user to satisfy any applicable requirements for their system.**

⚠WARNING **Personal Injury**	**HEARING PROTECTION—Due to typical noise levels in turbine or engine environments, hearing protection should be worn when working on or around the R-Series actuator.**

⚠WARNING **Personal Injury**	**HOT SURFACES—The surface of this product can become hot enough or cold enough to be a hazard. Use protective gear for product handling in these circumstances. Temperature ratings are included in the specification section of this manual.**

⚠WARNING **Personal Injury**	**NOT A STEP—The actuator was not designed to be used as a step for climbing up on the prime mover, engine or turbine. The actuator should be installed in a location where it will not be confused for or used as a step.**

⚠WARNING **Sudden Movement**	**Stay clear of the actuator output shaft and all attachments, as sudden movement can occur at any time. Failure to comply with this recommendation can cause personal injury and/or property damage.**

⚠WARNING **Overspeed**	**The engine, turbine, or other type of prime mover should be equipped with an overspeed shutdown device to protect against runaway or damage to the prime mover with possible personal injury, loss of life, or property damage.** **The overspeed shutdown device must be totally independent of the prime mover control system. An overtemperature or overpressure shutdown device may also be needed for safety, as appropriate.**

⚠WARNING **Fuel Shutoff**	**INDEPENDENT FUEL SHUTOFF REQUIRED** **The engine, turbine, or other type of prime mover should be equipped with an independent fuel shut-off device to protect against fuel leakage or damage to the prime mover with possible personal injury, loss of life, or property damage. The fuel shut off device must be totally independent of the prime mover control system.**

General Installation, Operation Notes and Requirements

Always make sure the application includes a primary overspeed protection device. The R-Series actuator does not include any overspeed protection.

⚠WARNING **Shutdown**	**Use of an independent device for positive shutdown, such as a fuel shut off valve is highly recommended. Failure to comply with this recommendation can cause personal injury and/or property damage.**

⚠WARNING **Shutdown**	**The actuator contains no internal return spring; therefore an external positive shutdown is necessary in the event of a loss of power to the actuator. A separate overspeed trip device is always mandatory.**

⚠WARNING **Shutdown**	**Use of a predicted min fuel shutdown procedure is highly recommended. Failure to comply with this recommendation can cause personal injury and/or property damage.**

Unpacking

Be careful when unpacking the actuator. Check the unit for signs of damage, such as bent or dented panels, scratches, and loose or broken parts. Notify the shipper and Woodward if damage is found.

⚠WARNING **Lifting**	**Use both hands to pick up the R-Series actuator. Do NOT pick up by the cable glands or by the terminal shaft, which could damage the R-Series or allow it to fall, with the possibility of personal injury.**

NOTICE	**Controls should be in place to prevent damage to the actuator throughout the entire process from receiving to final engine assembly and shipping.**

Dimensions

Both the R-11 and R-30 have the same physical dimensions, only the internal gearing is different. They can be mounted in any orientation and are completely self-contained.

All input and output signals run through two M20 threaded ports, using cable glands as needed to maintain the Class I, Division 2 / Zone 2 and Type 4 Enclosure Watertight. Field wiring is connected to internal screwless cage-clamp-style terminal blocks.

R-11 and R-30 Series Dimensions

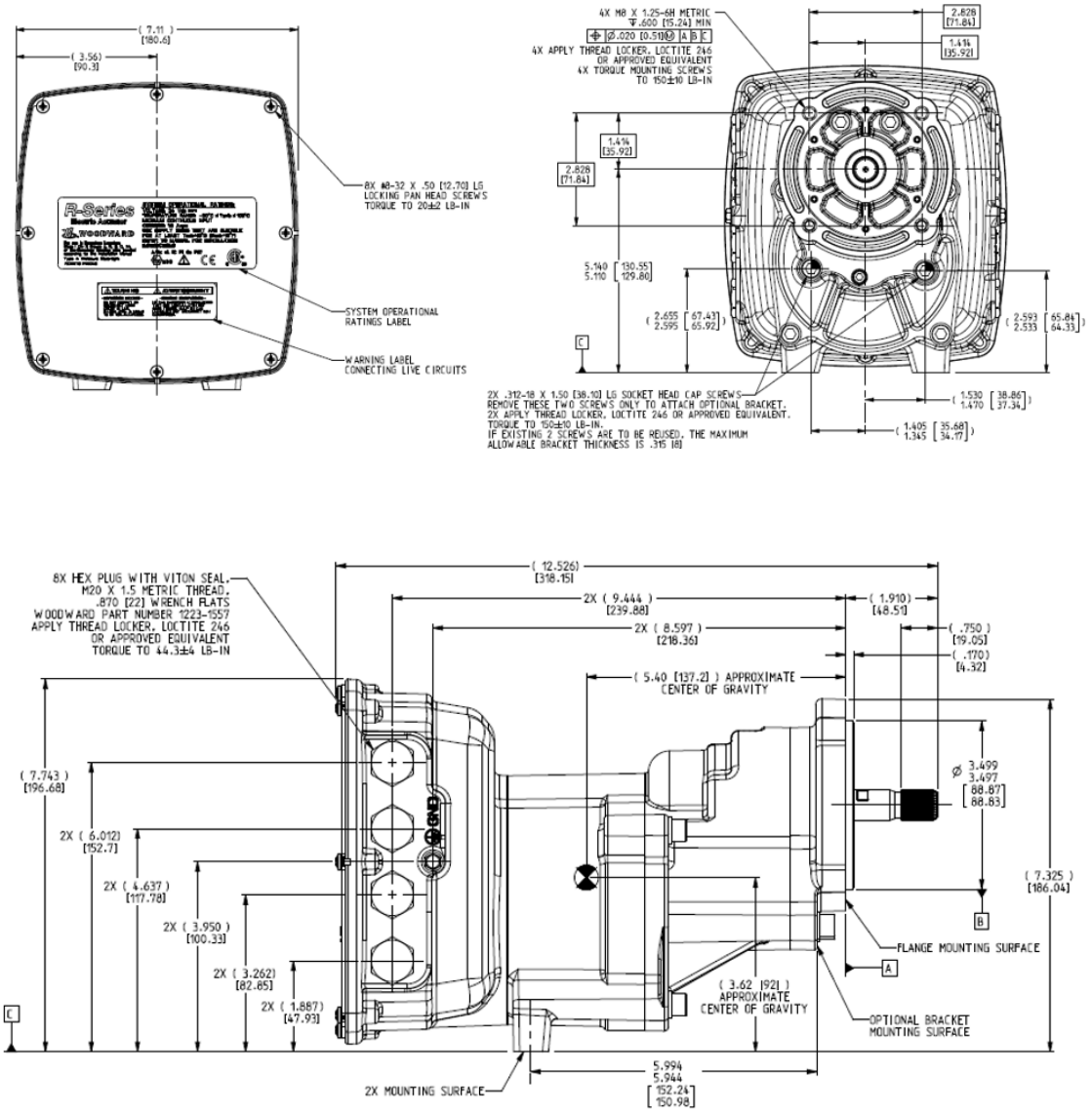

Figure 2-1a. R-11 and R-30 Dimensions

R-11 and R-30 Series Dimensions (continued)

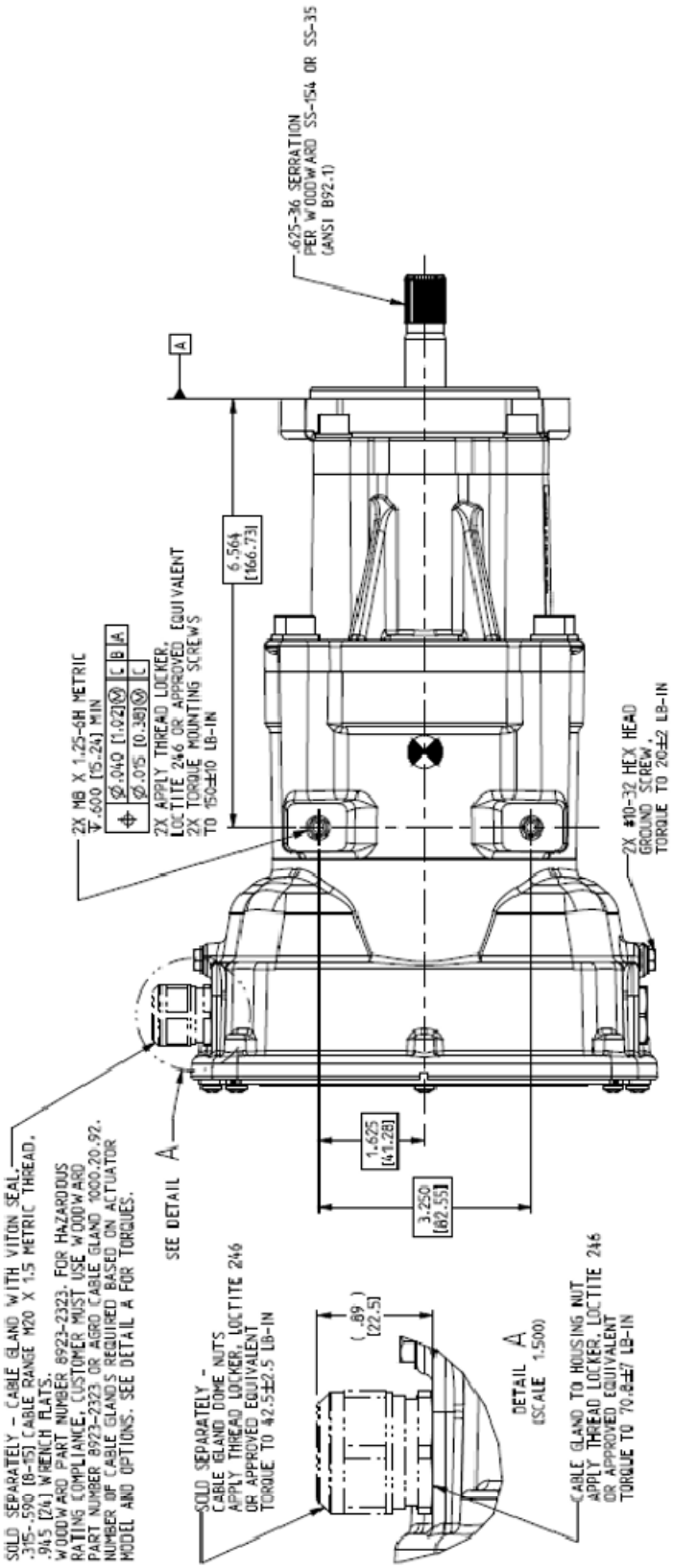

Figure 2-1b. R-11 and R-30 Dimensions (continued)

R-120 Series Dimensions

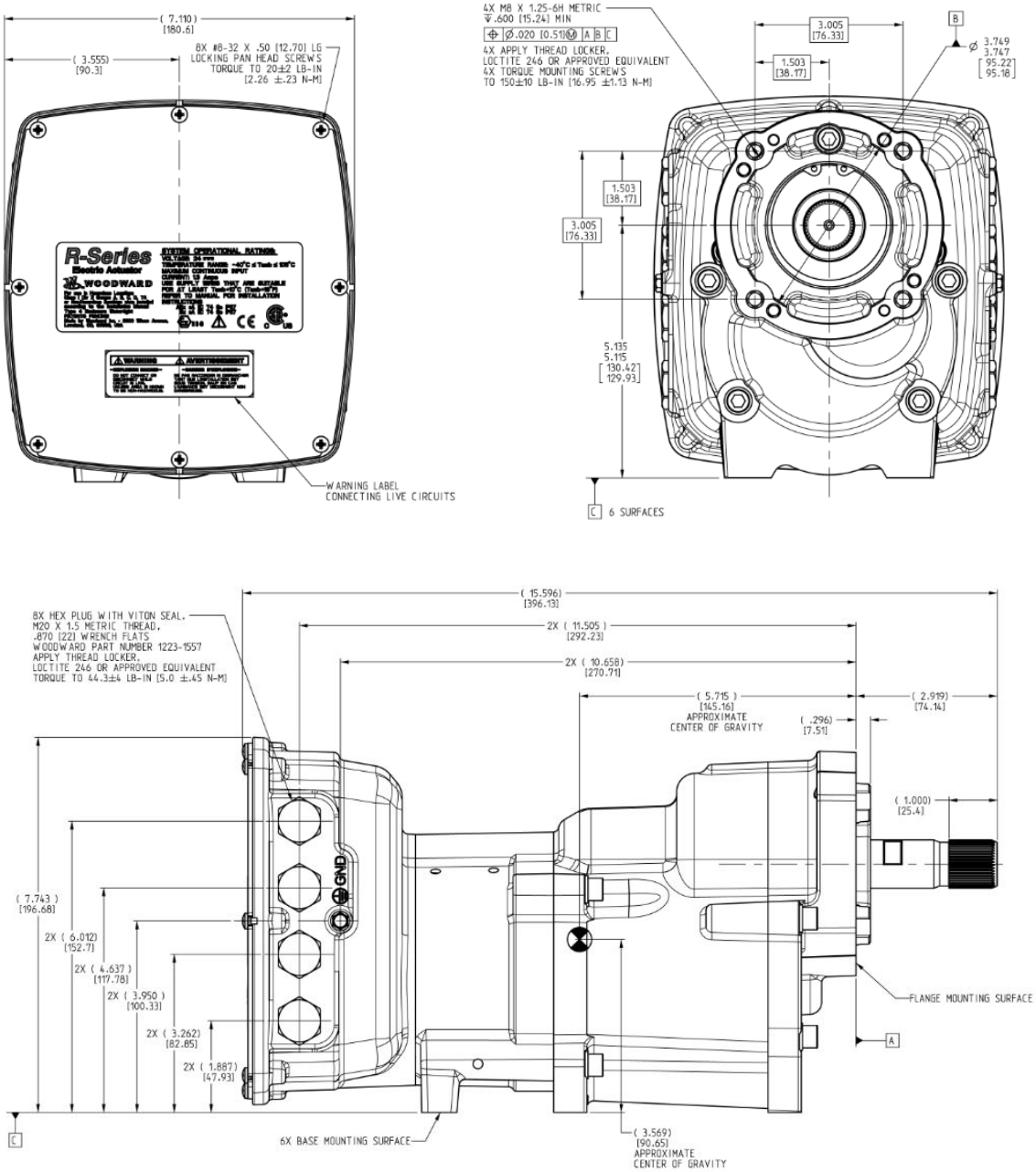

Figure 2-2a. R-120 Dimensions

R-120 Series Dimensions (continued)

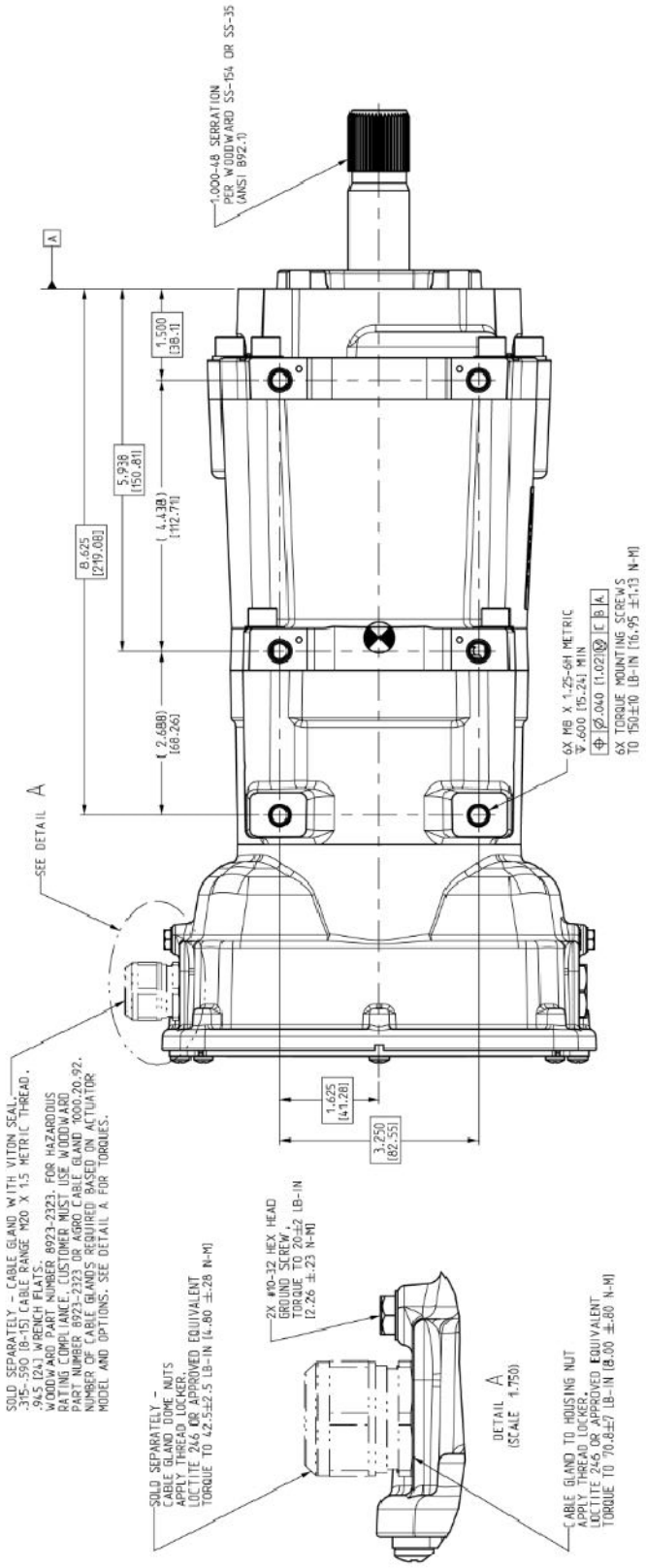

Figure 2-2b. R-120 Dimensions (continued)

Mechanical Installation

Mounting Location

Locate the R-Series actuator away from sources of extreme radiant heat, such as exhaust manifolds or turbochargers. The operating temperature range of the control is –40 °C to +105 °C (–40 °F to +221 °F). Ensure the mating surface contacting the output shaft is within the operating temperature range. Some position accuracy may be compromised from –40 °C to –30 °C. In spark-ignition applications, locate the R-Series actuator away from the ignition coils and leads, and do not route the actuator harness wires next to the spark plug wires.

NOTICE

Ensure that no welding operations are conducted on the engine after the actuator has been installed. If welding is necessary, ensure proper care is taken to prevent electrical and physical damage to the actuator.

The R-Series actuator has been designed for and verified to a given accelerated life vibration test level at the mounting surface of the actuator. The user should be aware that in any application, bracket design can significantly change the vibration levels at the actuator. Therefore, every effort should be made to make the bracket as stiff as possible so that engine vibrations are not amplified, creating an even more severe environment at the actuator. Guidance for collecting on-engine R-Series vibration levels is provided in the Appendix.

Mounting Orientation

The R-Series actuator may be mounted on-engine in any position. While it is not a requirement, it is good practice to orient the connector features on the actuator in a horizontal or downward orientation to minimize fluid accumulation between the enclosure and the cable gland gasket. Moreover, orienting the actuator shaft parallel to the crankshaft of the engine, when possible, often reduces the vibration load on the actuator's rotor system. The actuator must not be mounted solely from the face surface (the surface the output shaft protrudes from). All of the base mounting holes for the R-120 and the base and face mounting holes for the R-11 and R-30 must be used to safely support the actuator. It is important to install the actuator according to the torque and thread-locking compound specifications as shown in the Dimensions section above. Please note that the six threaded M8 mounting hole locations at the base of the R-120 and R-120AC actuators have helical inserts installed. These inserts are used at the two threaded M8 base mounting locations for R-11AC and R-30AC actuators. Helical inserts are not used at mounting locations for R-11 and R-30 actuators provided from Woodward without liquid cooling.

NOTICE

To prevent damage to helical inserts do not use thread-locking compound at any locations where the inserts are installed.

R-11 and R-30 Mounting Loads:

- Side Load on output shaft: 396 N / 89 lb (maximum)
- Thrust Load on output shaft: 67 N / 15 lb (maximum)

R-120 Mounting Loads:

- Side Load on output shaft: 916 N / 206 lb (max)
- Thrust Load on output shaft: 175 N / 39 lb (max)

Mounting the R-Series Actuator with an ITB

Typical mounting of actuators with Integrated Throttle Bodies (ITB) is accomplished by fastening the throttle to the inlet and outlet pipes. Ensure that the pipes can support the weight of the R-Series actuator and throttle body. The base mounting holes for the R-120 must be used to support the weight of the actuator in-application. The base and face mounting holes must be used to support the weight of the R-11 and R-30 in-application. The base and face mounting of actuators must be to a structural surface or bracket.

Using the R-Series Actuator with a Return Spring

In order to protect the gears of the actuator, an external return spring must not cause the actuator to impact (slam into) the stops. The maximum stop impact is 20 rpm for R-11 and R-30 devices and 4 rpm for an R-120. This includes when the actuator is not powered (experiences an unpowered shutdown).

Note: The R-120 shaft must not exceed four (4) rpm to protect the gear teeth from damage due to impacting a hard stop, either internal or external.

NOTICE	**Do not install any external mechanical stops inside the actuator's range of travel without properly modifying the actuator travel settings. This could cause damage to the actuator's gearing or to the end device because the impact velocity is not adjusted inside the actuator's hard stops.**

R-Series Grounding

The R-Series must be grounded to the engine structure through a low-impedance connection in order to ensure proper EMC performance. This may be accomplished through the mechanical mounting of the actuator/throttle itself (preferred), or through a wired connection to a designated ground screw on the unit. If a wired connection is used as the primary EMC ground, it must be through a low impedance wire or strap < 30 cm (12 inches) in length, 3 mm² (12 AWG) minimum. See Figure 2-3 for ground screw location on the actuator. The torque specification for this ground fastener is (3.4 ± 0.34) Nm / (30 ± 3.0) lb-in.

Figure 2-3. Location of Ground Screw for Wired Ground Connection

Output Shaft

The R-11 and R-30 actuators have 71° to 75° of available rotational travel. The R-120 actuator has 91° to 95° of available rotational travel. Electrical stops should be set inside the actuator stops. The electrical stops and direction of travel (CW/CCW) are configurable in the Service Tool. See Chapter 6, Actuator Travel / Setup.

Linkage

Proper design and installation of the actuator linkage is necessary for the R-Series unit to provide the best possible position control. Ensure the actuator has ample work capacity to control the end device under maximum load conditions.

Manually stroke the end device linkage from stop to stop as if the actuator were moving it. The linkage must move freely, with minimum friction and backlash. Lubricate or replace worn linkage parts as required.

Maximum load inertia for the R-Series actuators:

- R-11 is 2.19E-3 kg-m2 (1.94E-2 in-lb-s2)
- R-30 is 5.26E-3 kg-m2 (4.66E-2 in-lb-s2)
- R-120 is 5.85E-2 kg-m2 (0.518 in-lb-s2)

Actuator and End Device Alignment

When installing the actuator onto an end device (throttle, valve, etc.), the following procedure should be followed.

1. Install the actuator and end device into the final install location, leaving the actuator/end device linkage loose.
2. Apply power to the actuator and apply a 0% position command. Verify the actuator is held at 0% position.
3. Manually move the end device to the end device's 0% position and tighten the linkage between the actuator and end device. This will set both the actuator and end device 0% positions.
4. Now stroke the actuator back and forth to verify the linkage is tight and nothing slips.

R-11 and R-130 Mounting Loads:

- Side Load on output shaft: 396 N / 89 lb (maximum)
- Thrust Load on output shaft: 67 N / 15 lb (maximum)

R-120 Mounting Loads:

- Side Load on output shaft: 916 N / 206 lb (max)
- Thrust Load on output shaft: 175 N / 39 lb (max

NOTICE	**Do not install any external mechanical stops inside the actuator's range of travel without properly modifying the actuator travel settings. This could cause damage to the actuator's gearing or the end device because the impact velocity is not adjusted inside the actuator's hard stops.**

NOTICE	**The actuator's maximum slew rate can place stress on the valve system stops and on the linkage between the actuator and the valve system. The maximum actuator speed is 1600° per second for the R-11, 900° per second for the R-30, and 170° per second for the R-120 in both the increase and decrease directions under normal operating conditions. Exceeding the control input voltage requirements may cause a unit shutdown in which the actuator speeds given above may be exceeded.**

Chapter 3.
Electrical Installation

WARNING **Ingress Protection**	**The Ingress Protection rating of the R-Series requires the use of a proper cable gland, such as AGRO part number 1000.20.92. Refer to Table 3-1 for a description of proper connections.**

WARNING **Sudden Movement**	**The controller protects the internal electronics by going to limp mode "zero torque" when the internal temperature exceeds 125 °C. When this happens, the position of the output shaft is not controlled by the actuator. When the internal temperature of the R-Series returns to below 125 °C, there may be a sudden movement to the latest command position.**

WARNING **Fuel Shutoff**	**INDEPENDENT FUEL SHUTOFF REQUIRED—The engine, turbine, or other type of prime mover should be equipped with an independent fuel shut-off device to protect against fuel leakage or damage to the prime mover with possible personal injury, loss of life, or property damage. The fuel shut off device must be totally independent of the prime mover control system.**

Introduction

This chapter provides instructions on how to connect the R-Series control into a system. Figure 3-5 shows typical control connections to external devices.

R-Series actuators are provided with eight threaded ports around the perimeter of the electronics housing that are designed to accept threaded gland seals. The actuators are shipped from Woodward with sealing plugs in each of these gland seal locations. All cable-populated port locations must use Woodward recommended gland seals in order meet compliance requirements and provide ingress protection levels per Appendix D. An access plate at the electronics housing allows electrical connections to be made directly on the control module in the actuator housing.

Other connection configurations, including but not limited to Mil-spec type connectors, are possible with the design of the actuator. Any deviation from the product as designed, tested, listed, and presented in this manual must be reviewed and approved by Woodward, Inc. Application-specific details including vibration, temperature, zone type and category could limit options for alternate connector configurations.

The R-Series has an operating voltage range of 18 to 32 VDC with nominal voltage of 24 VDC. The power supply input is reverse polarity protected and consumes 24 W (0.75 A at 32 VDC) at maximum steady-state torque.

Maximum average current is 1 A at 24 V (1.3 A at 18 V).

Shielded Wiring

The use of cable with individually shielded-twisted pairs is required where indicated by the control wiring diagram (Figure 3-5). Cable shields must be terminated as indicated in the control wiring diagram using the installation notes described below. The actuator shield pins consist of high frequency terminations only (i.e., via a capacitor), therefore it is permissible for the user to 'hard' ground at the end away from the actuator if needed to address other system interfaces. However, DO NOT attempt to directly ground the shield at both ends, since an undesired ground loop condition may occur.

Installation Notes

- Wires exposed beyond the shield should be as short as possible, not exceeding 50 mm (2 inches).
- The shield termination wire (or drain wire) should be kept as short as possible, not exceeding 50 mm (2 inches), and where possible the diameter should be maximized.
- Installations with severe electromagnetic interference (EMI) may require additional shielding precautions. Contact Woodward for more information.

Failure to provide shielding can produce future conditions which are difficult to diagnose. Proper shielding is required to assure satisfactory operation of the product.

Electrical Connections

WARNING

Grounding

The R-Series battery ground (TB2-2) is internally common to the PWM Input ground (TB1-2), Analog Process Input ground (TB4-4), Analog Output ground (TB1-9), and Discrete ground (TB2-10). Therefore, these I/O ground connections should only be used when connecting to an isolated or differential interface and should never be connected to a point that is common to the system battery ground. Otherwise, a ground loop condition may exist that is detrimental to system performance.

NOTICE

Do not connect any cable grounds to "instrument ground", "control ground", or any non-earth ground system. Make all required electrical connections based on the wiring diagram (Figure 3-5).

NOTICE

In order to ensure that the R-Series performance is not inhibited by ignition or injector system noise, Woodward recommends that the R-Series housing and harness be kept at least 2 cm away from coil primary wires and 3 cm from high-voltage secondary leads/wires.

This recommendation assumes that the ignition system utilizes a resistive secondary (5 kΩ minimum) and a worst-case secondary voltage of 20 kV. In cases where the ignition does not utilize a resistive secondary or generates higher voltages, the distances may need to be increased in order to maintain compatibility.

NOTICE

Ensure that no wires are exposed to sharp edges that may cause wear to the wire insulation, which could result in shorted or open signals. The use of "stand offs" is recommended to avoid these issues.

NOTICE

Ensure the wiring harness is properly designed and routed to prevent water, oil, or other contamination from pooling and penetrating the connections and/or splices. Use of drip loops during the installation and routing of the harness are recommended.

NOTICE

Ensure the wiring harness is properly supported over the length of the run between the actuator and external connections, following best practices for distances between securing points and best practices for minimum cable bend radius. The cables should be supported within 0.5m (1.6 feet) of the actuator. Tensile loading of the cables at any point, but especially between the actuator and the first securing point, must be avoided.

General

Prior to installation, refer to the wiring diagrams and the representative I/O interface schematics in this chapter.

Use 1 mm² to 1.5 mm² (16 AWG to 18 AWG) stranded copper wire with insulation meeting temperature requirements in the harness design. A wiring harness stress relief within 300mm (12 inches) of the control's connector is highly recommended.

Limit all I/O and signal lines to less than 30m (98 feet) for Stationary Industrial EMC Compliance.

Dress the wiring harness with wire loom (or equal) to contain it in a single bundle. Route one multi-conductor cable through each cable gland. Do not install multiple cables into one cable gland as this will void the ingress protection rating of the R-Series actuator. **Use multi-conductor cables with an outer diameter between 8mm and 15mm.**

Recommended multi-conductor cables are listed below. The power input and key switch cable is required; the other cables are application-dependent.

Power Input and Key Switch: 3-conductor cable, 16 14 AWG

Command Signals (analog input, analog output, PWM input): 1, 2, or 3 shielded pair, 18 or 20 AWG

Discrete I/O: 7-conductor cable, 18 AWG

CAN 1: SAE J1939-11 cable.

CAN 2: SAE J1939-11 cable.

In spark-ignition engine applications, route the R-Series actuator harness wires away from the spark plug wires.

All field communications and commands enter the R-Series actuator through cable gland ports on the sides of the R-Series actuator user interface panel assembly. To maintain the ingress protection rating, the field cable must be installed through a cable gland nut.

Remove the wiring access cover plate located on the front of the user interface panel by removing the eight screws to access the connection terminal blocks. The eight screws (Woodward PN 1031-3032) are provided with captive split lock washers. These screws have Pozidriv heads (ANSI Type IA Cross Recess) and are designed to engage with a Pozidriv No.2 size driver. The correct driver is recommended for removal and installation of the fasteners, but a Phillips type driver can be used if the correct driver is not available. If using a Phillips driver with these fasteners, care should be taken to avoid damage to the fasteners due to cam out action under torque loading of the driver.

At any location that will accept a cable for the application, remove the plug and install a cable-gland (Woodward kit number 8923-2323, Gland-AGRO cable gland, M20 x 1.5, FPM seals, AGRO part number 1000.20.92). Apply thread locker (Woodward part number 2001-201, Loctite 246 or equivalent) to the cable gland body threads before threading into the user interface panel assembly. Torque the cable gland body to 8.0 ± 0.25 Nm (70.8 ± 2.5 lb-in). Slide the dome nut over the end of the cable with the dome nut threads toward the cable end. Remove approximately 100 mm (4 inches) of the overall cable jacket to provide a sufficient service loop inside the user interface panel to land the individual signal wires on the proper internal terminal.

Seal plugs (Woodward part number 1223-1557, plug-hex, M20x1.5, Viton seal, Sealcon part number HM-20-BR-V) provided with the unit are to be installed at all unused locations. Thread locker (Woodward part number 2001-201, Loctite 246 or equivalent) should be applied to the threads of each plug before being threaded in and torque to 5.0 ± 0.25 Nm (44.3 ± 2.5 lb-in).

NOTICE

Because of incremental product improvements, you may notice various characteristics in the photos below do not match your actuator's appearance (for example, the color of the wiring terminals and board ground straps).

However, the wiring terminal locations, dressing of the wires, and recommended wiring entry points and routing are entirely accurate.

Wire Routing

Strip approximately 10mm (0.4 inch) of insulation from each individual wire and crimp on a wire ferrule (Woodward part number 1602-1252, Wago number 216-224 for 16 AWG wire and Woodward part number 1602-1251, Wago number 216-223 for 18 AWG wire) to the end of each wire. Use the proper crimp tool, "CRIMPFOX 6H" Woodward part number 8996-2197 (Phoenix part number 12 12 046) to crimp the ferrules onto the wires with a hexagonal crimp. The wire should extend to the end of the ferrule, but not beyond it. If the wire extends beyond the end of the ferrule, cut the excess wire off with wire cutters. The ferrule assures the wire does not slip out of the terminal block in high vibration environments. Tinning (soldering) the ends is not an acceptable option since the spring terminals will not grip the wires as well.

In some installations, double-entry ferrules will be needed. For these installations follow the same guidelines given above for preparing the wires and crimp on a wire ferrule (Woodward part number 1606-446, Phoenix number 3200810 for two 18 AWG wires and Woodward part number 1606-448, Phoenix number 3200823 for two 16 AWG wires) to the end of each wire pair. Use the same crimp tool, "CRIMPFOX 6H" Woodward part number 8996-2197 (Phoenix part number 12 12 046) to crimp the ferrules onto the wire pairs with a hexagonal crimp. The wires should extend to the end of the ferrule, but not beyond it. If the wires extend beyond the end of the ferrule, cut the excess wire off with wire cutters. The ferrule assures the wire does not slip out of the terminal block in high vibration environments. Tinning (soldering) the ends is not an acceptable option since the spring terminals will not grip the wires as well. If a different tool and/or ferrule is used, they should comply with IEC/EN 60352-2 standards or similar.

NOTICE

Exceeding the equivalent cross-section area of two 16 AWG wires with recommended ferrule (as described above) at any single terminal block location could cause issues with wire retention in the terminal block in high-vibration environments.

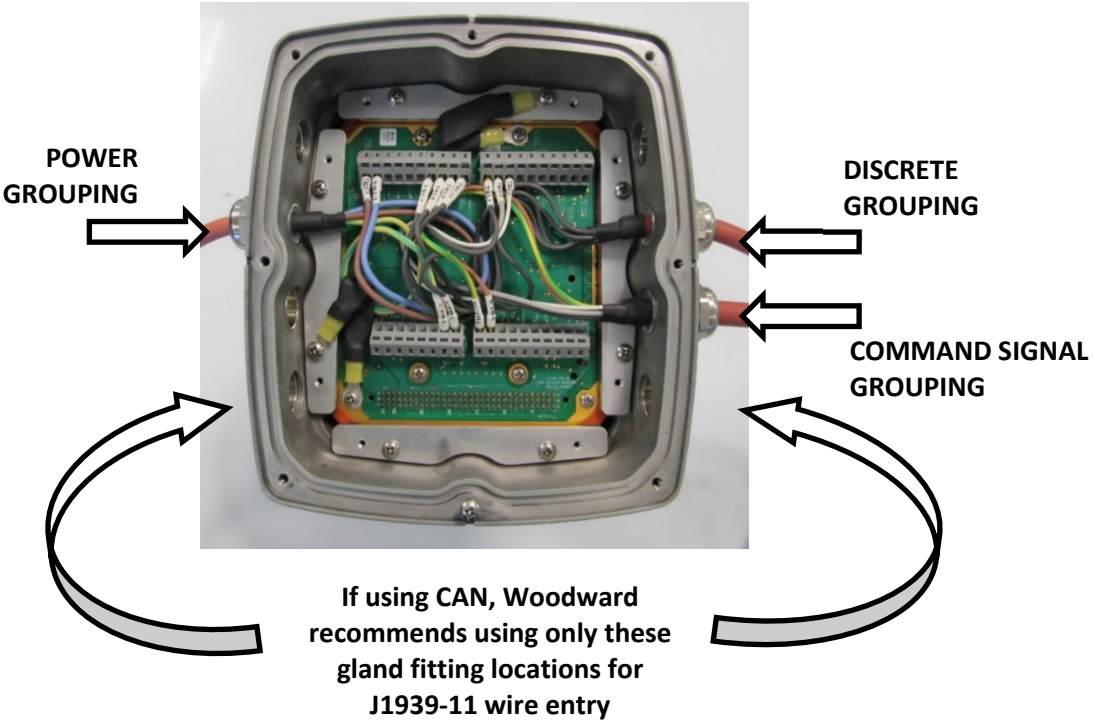

Figure 3-1a. Wire Routing #1

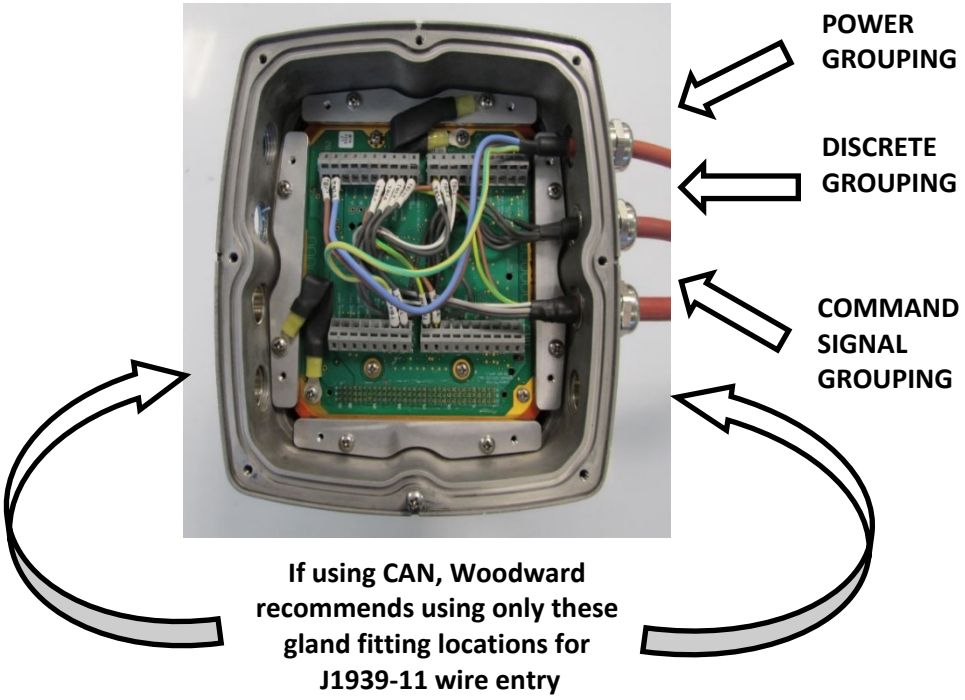

Figure 3-1b. Wire Routing #2

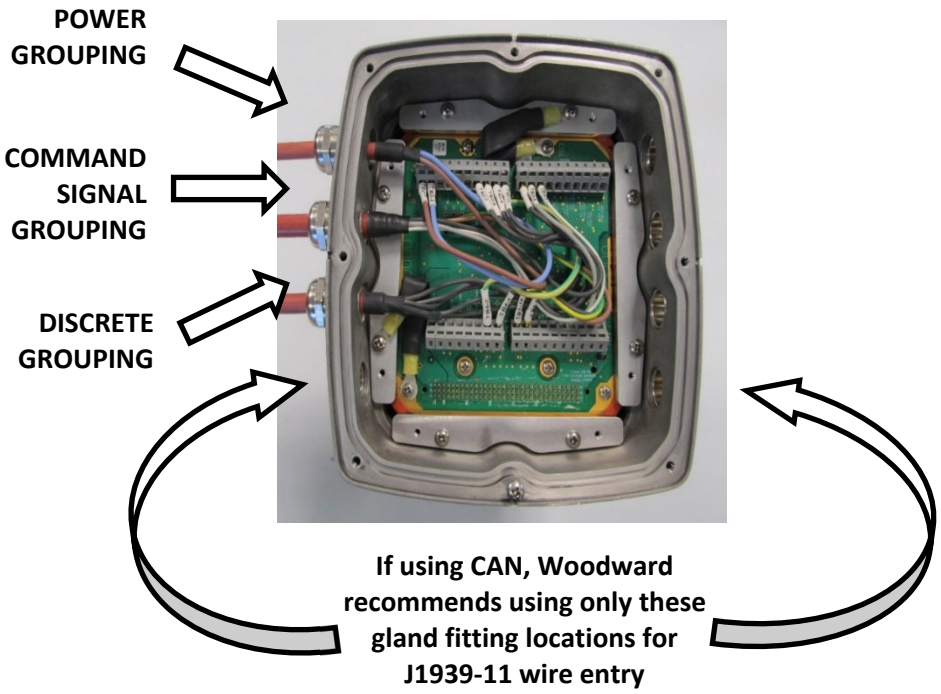

Figure 3-1c. Wire Routing #3

Insert the ferrules and wires through the cable gland, providing enough wire inside the electronics housing to run loose wires to connection points at the terminal blocks. Use a small, flathead screwdriver inserted in the back of the wiring terminal to assist in the insertion of the ferrule into its associated terminal location. Figure 3-2 below shows the steps for properly installing a wire in the terminal using a small, flathead screwdriver.

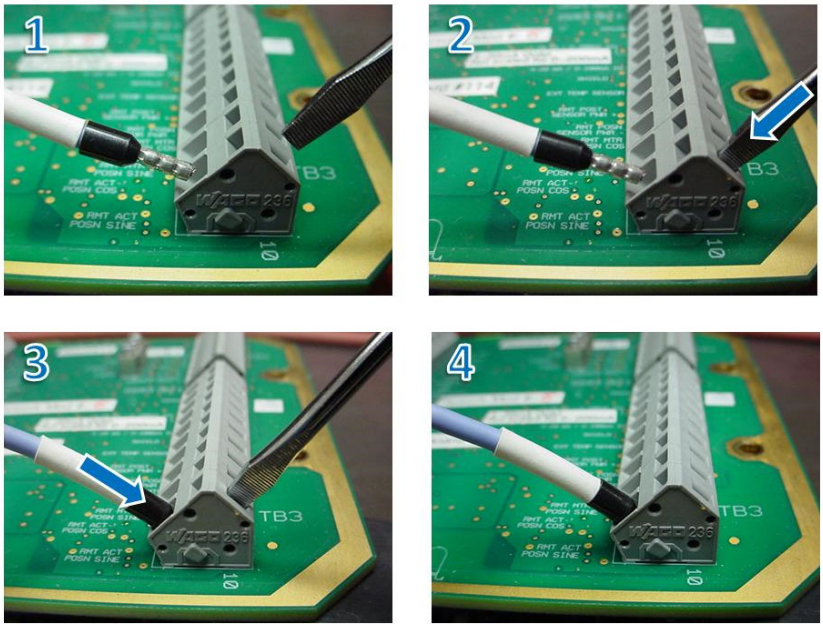

Figure 3-2. Ferrule Installation

After installing the wires, apply thread locker (Woodward part number 2001-201, Loctite 246 or equivalent) to the dome nut threads and screw the dome nut onto the cable gland body on the sides of the R-Series actuator user interface panel assembly. Make sure that the cable's overall jacket extends slightly past the cable gland so that the rubber seal completely and tightly grips the cable jacket.

⚠WARNING **Hazardous Location**	**For Hazardous rating compliance, customer must use Woodward Part Number 8923-2323 or AGRO Cable Gland 1000.20.92 and plugs 1223-1557 (Sealcon HM-20-BR-V) must be used. In addition, apply threadlocker Loctite 246 to the threads that install in the electronic housing (M20 threads).**

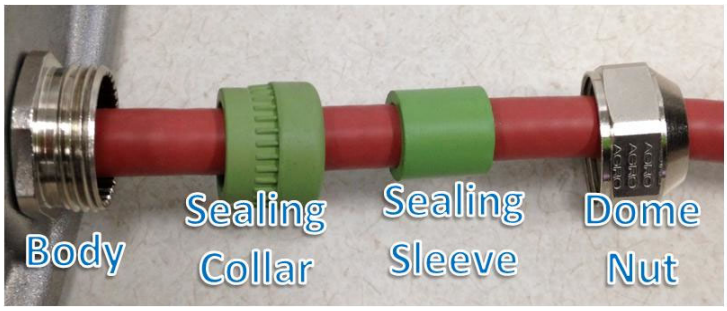

Figure 3-3. Cable Gland Components

Tighten the cable gland top dome nut to (4.75 ± 0.25) Nm / (42.5 ± 2.5) lb-in against the sealing collar and sleeve as shown below in Figure 3-4a picture 4.

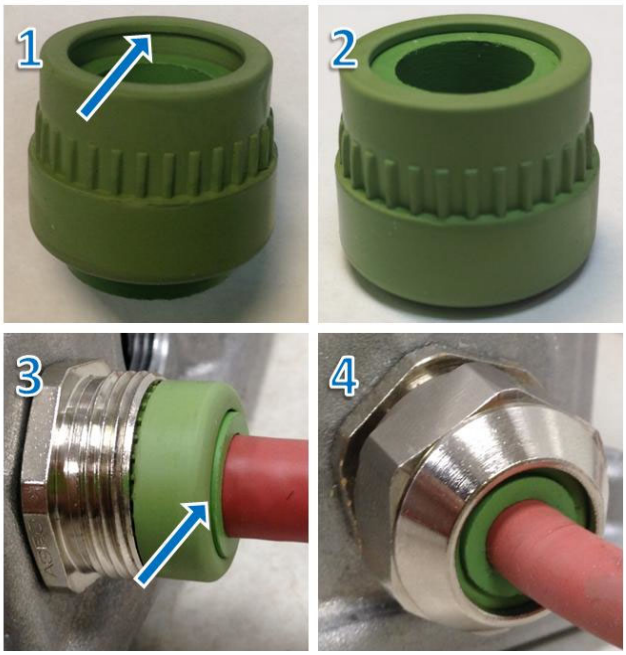

Figure 3-4a. Cable Gland Sealing

Note in picture 1 of Figure 3-4a, there is a ridge on the inside bottom of the sealing collar for the sealing sleeve to stop on. Do not push the sealing sleeve past this ridge. If the sleeve is installed past the ridge, the cable gland will not seal properly. Picture 3 shows a correct installation with the sealing sleeve slightly proud of the sealing collar.

Replace the wiring access cover plate. Ensure the sealing O-ring (Woodward part number 1355-1099) that goes between the cover and housing is in place. If the O-ring is missing or damaged it needs to be replaced in order to maintain the ingress protection rating. Tighten the eight screws (Woodward part number 1031-3032) holding it to the user interface panel. Torque all eight screws to (2.3 ± 0.23) Nm / (20 ± 2.0) lb-in. A Pozidriv No.2 size driver is recommended for these fasteners. A Phillips type driver can be used if the correct driver is not available. If using a Phillips driver with these fasteners, care should be taken to avoid damage to the fasteners due to cam out action under torque loading of the driver.

WARNING **The Ingress Protection rating of the R-Series requires the use of cables with a circular profile.**

Ingress Protection

Figure 3-4b shows how a cable that does not have a circular profile prevents the gland nut from sealing against the cables casing. If the gland nut does not seal against the cable's casing, ingress protection is not maintained.

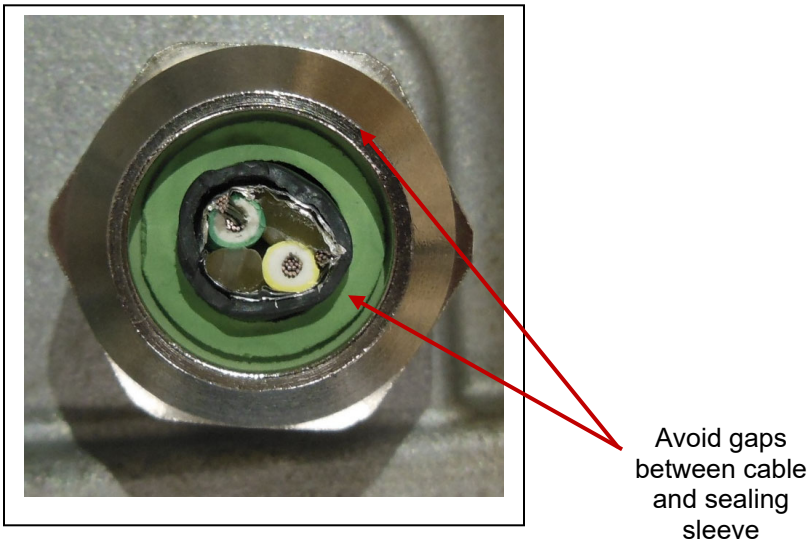

Figure 3-4b. Improper Cable Gland Sealing

Field Wiring Diagram

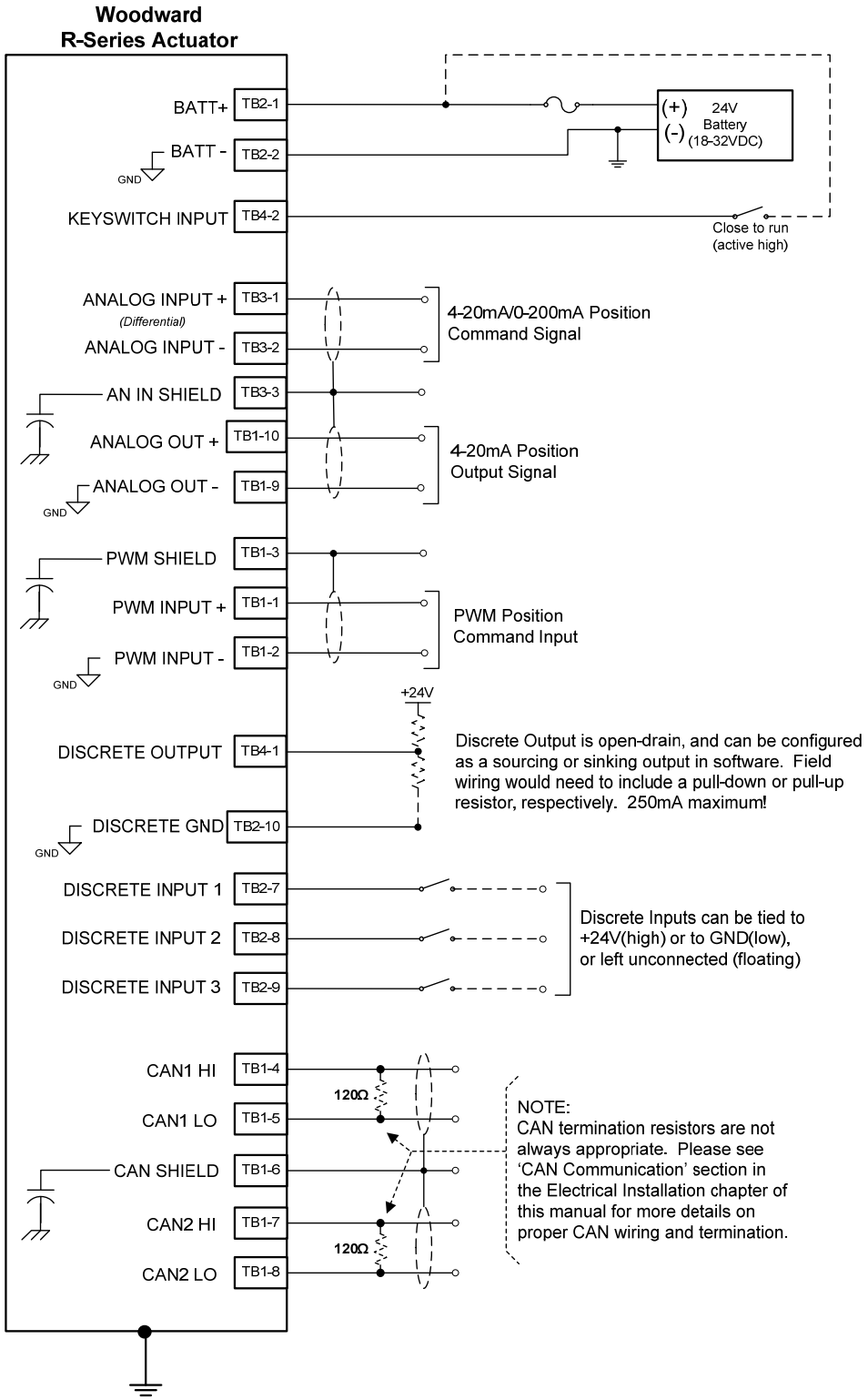

Figure 3-5. Field Wiring Diagram

Table 3-1. Typical R-Series Actuator Control Wiring

Pin	Signal	Gland Fitting	Type	Recommended Wire Grouping
TB2-1	Battery (+)	A4	16 AWG min.	Power
TB2-2	Battery (–)	A4	16 AWG min.	Power
TB4-2	Keyswitch	A4	16 AWG	Power
TB2-7	Discrete Input 1	A1	18 AWG	Discrete
TB2-8	Discrete Input 2	A1	18 AWG	Discrete
TB2-9	Discrete Input 3	A1	18 AWG	Discrete
TB4-1	Discrete Output	A1	18 AWG	Discrete
TB2-10	Discrete Ground	A1	18 AWG	Discrete
TB1-1	PWM Command	A3	Twisted pair, 18 AWG, shielded	Command Signal
TB1-2	PWM Return	A3		
TB1-3	PWM Shield	A3		
TB3-1	mA Command (+)	A3	Twisted pair, 18 AWG, shielded	Command Signal
TB3-2	mA Command (–)	A3		
TB3-3	mA Shield	A3		
TB1-10	Analog Output (+)	A3	Twisted pair, 18 AWG, shielded	Command Signal
TB1-9	Analog Output (–)	A3		
TB1-4	CAN1 Hi	A2	J1939-11 cable	CAN1
TB1-5	CAN1 Lo	A2		
TB1-6	CAN Shield	A2		
TB1-7	CAN2 Hi	A5	J1939-11 cable	CAN2
TB1-8	CAN2 Lo	A5		

NOTICE

In addition to the information in Table 3-1, wire sizing and length should be as follows:

<u>Input Power:</u> Shall be AWG 16-14 (1.5mm^2 – 2.0mm^2). Maximum length of the input power wiring will depend on the wiring used. Maintain a sufficiently short distance between the power source and the R-Series power input such that the input voltage at the actuator remains ≥ 18VDC under all conditions of temperature and load.

<u>All Other I/O Wiring:</u> Shall be AWG 20-16 (0.5mm^2 – 1.5mm^2). The maximum length of all I/O wiring is limited to 30 meters.

Description of Electrical I/O

Representative circuitry is shown for the R-Series actuator inputs/outputs in the figures in this chapter.

Power Supply Input

TB2-1 = Battery (+)
TB2-2 = Battery (–)

The R-Series actuator requires a voltage source of 18 to 32 VDC, with a current capacity of at least 10 A. The actuator is functional in the range of 18 to 32 VDC, but for supply voltages < 20 VDC, full steady state torque may not be available over the entire operating range. The actuator tolerates input voltages as low as 12 VDC without resetting the internal processor.

Run the power leads directly from the power source to the control. Do not power other devices with leads common to the control (see Figure 3-7). If the power source is a battery, be sure the system includes an alternator or other battery-charging device.

Power supply monitoring diagnostics are available for input voltage high or low. The thresholds and fault actions are configurable in software, refer to the Service Tool (Chapter 7) for details.

NOTICE

The input power must be fused. Failure to fuse the R-Series actuator could, under exceptional circumstances, lead to personal injury, damage to the control, and/or explosion.

IMPORTANT

Because the R-Series is an electric actuator and contains a motor that is powered directly from the battery input, significant flyback pulses may be present on the battery(+) line during operation. On a battery-operated system, this will not present an issue, because the flyback energy is sunk into the battery without a problem.

In a system powered with a switching power supply, the flyback can cause excursions that the output of the source may not be well-suited to handle. It is common, especially in smaller switching supplies (even if the source is rated to the recommended current), that the output capacitance of the source is not sufficient to operate the R-Series actuator, and it may be necessary to add additional capacitance to the power line for the supply to be stable. Testing at Woodward has shown that 10,000µF across the power input lines to the R-Series actuator helps significantly in these applications, especially if a blocking diode is placed in series with the power input. This capacitor should be placed near the power source if system packaging makes it possible. If a blocking diode is used, the capacitor should be installed *in parallel between the diode and actuator.*

When selecting a switching power supply, keep in mind that the in-rush current of the R-Series actuator can approach 5 A, and the internal motor flyback from large position changes can result in spikes of approximately 50 V to 70 V on the input power line. Added capacitance must be rated to handle this energy. A minimum rating of 100 V in the intended environment is suggested.

The power supply terminals are reverse polarity protected, and in the case that a reverse polarity condition exists, the R-Series actuator will not power-up and, if attached to a throttle body (ITB) with an internal return spring, will remain at the position dictated by the return spring.

Woodward recommends using a 6 A slow-blow fuse for 24 V battery-powered applications.

The R-Series actuator can also be powered using a switched-source supply, in which case greater care must be taken to protect the supply from motor flyback pulses and also protect the R-Series from over-current stress in the case of a functional fault. Damage to the power supply or functional irregularities as a result of motor flyback can be prevented through the use of a forward-biased diode on the positive supply source line (see Figure 3-6). When switching supplies are used, it is recommended to use a *hydraulic-magnetic* breaker instead of a fuse, because the current-limiting feature in the supply may activate before the fuse. If this occurs during a fault condition, the power supply may be protected, but the R-Series may be damaged. Hydraulic-magnetic breakers will trip very close to the desired point and remain consistent over a wide range of ambient temperatures. Conversely, ambient temperature variation can cause a large variation in the over-current trip point for a breaker using thermal-magnetic technology. For this reason, the use of thermal-magnetic breakers for this application is NOT RECOMMENDED.

For switching power sources, the following are recommended:
Diode: 8 A minimum forward current, 100 VDC minimum reverse voltage, rapid recovery.

Circuit Breaker: Hydraulic-magnetic device rated at 5.5 A – 6 A, 100 VDC, using a time delay of not greater than 3 seconds for a 200% over-current event.

Power Supply: 10 A minimum output rating with current limiting. It is preferred to use a power supply with a minimum of 5000 µF output capacitance, however with diode protection, this is not a hard specification. Good examples of power supplies can be found in the Phoenix Contact Quint portfolio. Visit Phoenix Contact for more information.

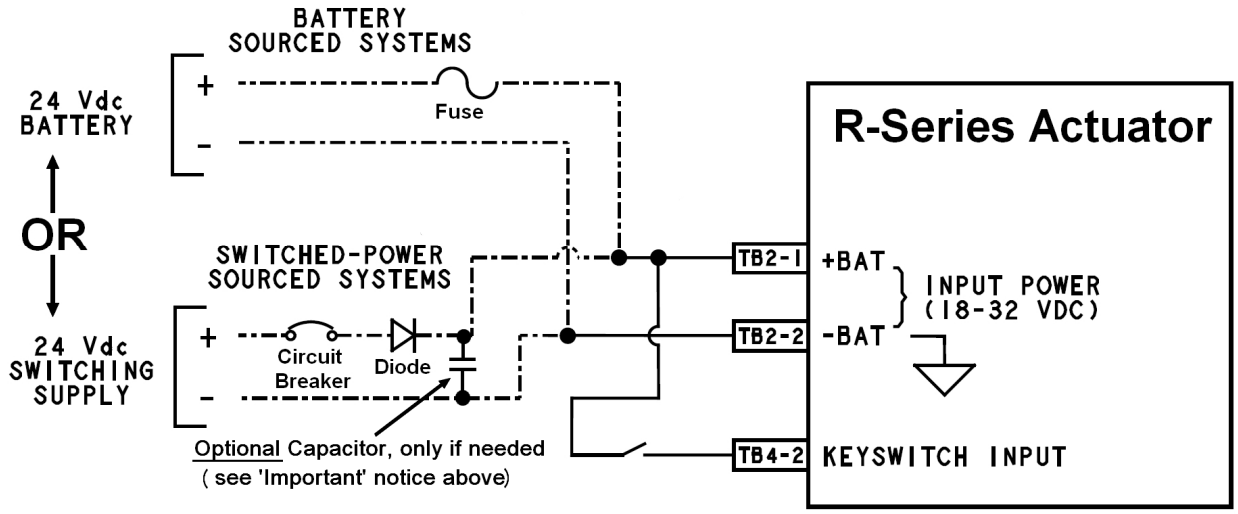

Figure 3-6. Input Power Options

IMPORTANT

All connector pins are short-circuit protected to ground and power except pins TB1-9, TB1-2, and TB2-10 which are not protected against shorts to battery positive.

Installation of a fuse on the battery negative (B–) wire (TB2-2) would provide protection to these pins but does not mean one is not needed in the power connection. TB2-1 (B+) still needs protection against a short to ground.

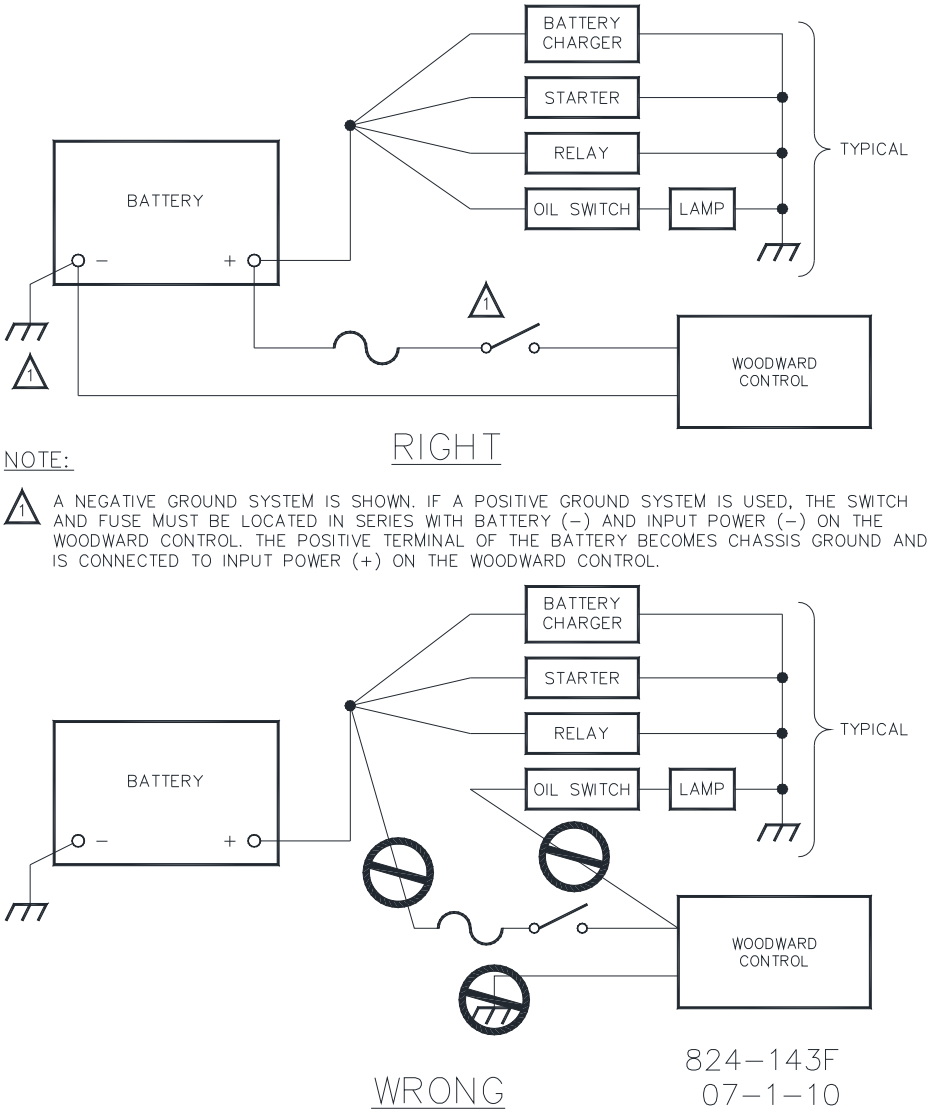

Figure 3-7. Correct and Incorrect Wiring to Power Supply

Keyswitch Input

TB4-2 = Keyswitch Input (24 V)

The keyswitch input is used to switch the R-Series in and out of the run state. A high signal (connected 18 to 32 V supply) allows the actuator to operate in a normal mode. When the keyswitch input goes low, the actuator stores non-volatile variables and then powers itself off. Keyswitch off input current draw is less than 2 mA. Keyswitch works best when tied directly to fused battery supply, *but must be greater than 8 V* to activate and *drop below 5V* to deactivate.

IMPORTANT **Use of the keyswitch input is highly recommended to ensure non-volatile variables are stored prior to power down.**

PWM Command Input

TB1-1 = PWM (+)
TB1-2 = PWM (–) Return
TB1-3 = PWM Shield

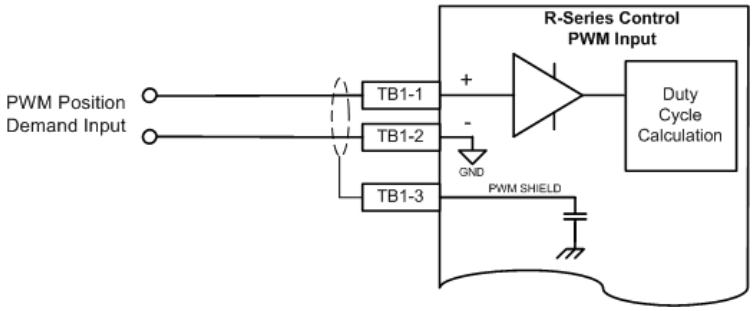

Figure 3-8. PWM Input

The PWM command input is a single-ended type capable of handling high–side, low-side, and push-pull style PWM sources. Pull-up level is 12 V through 3 kΩ. Pull-down is through 2 kΩ. See Figure 3-9 for acceptable PWM input types.

This input will handle a PWM frequency range from 100 to 2000 Hz at amplitudes ranging from 8 V to 32 V. A typical operating range is from 10% to 90% duty cycle. The type, duty cycle-to-position command scaling, and diagnostic thresholds are configurable software settings, refer to the Service Tool (Chapter 7) for details.

Figure 3-9a. Acceptable PWM Input Types

Push-Pull PWM Source (three variations)

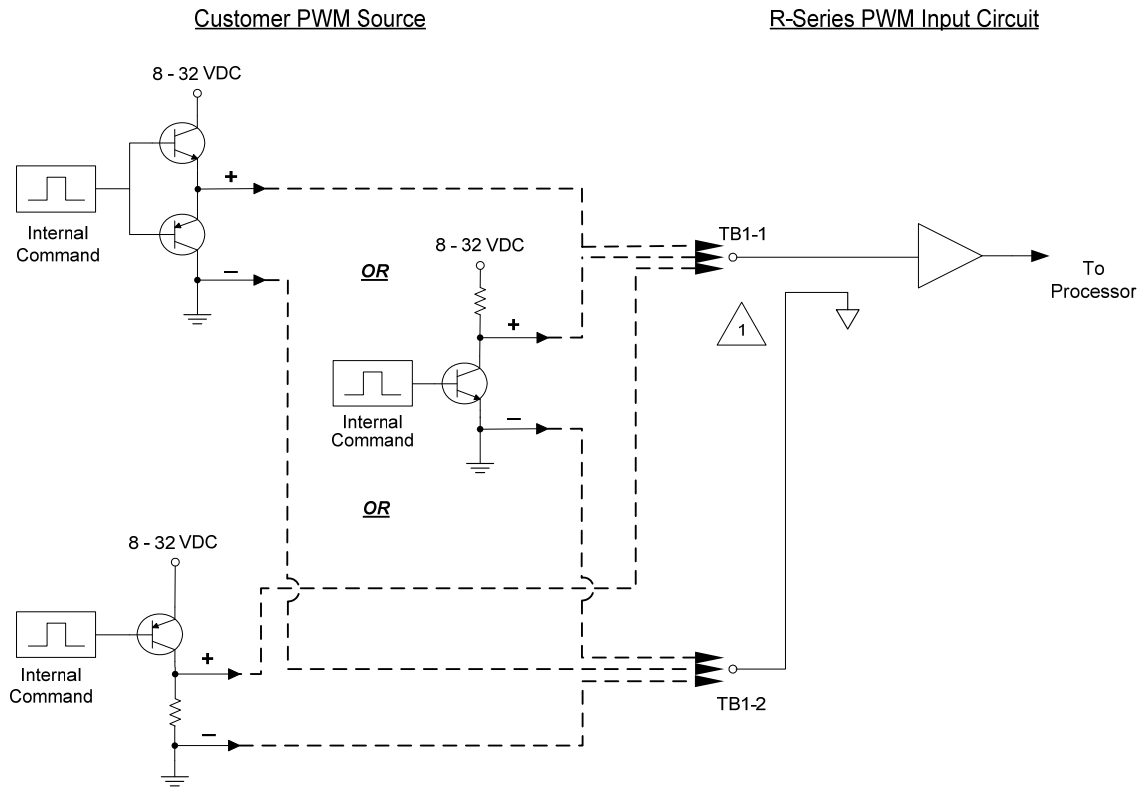

NOTES:

1 The R-Series must be configured to expect the appropriate PWM source. See Table 3-2 for more details on configuring I/O using the discrete inputs.

Figure 3-9b. Acceptable PWM Input Types

Shaft Position (Analog) Output

TB1-10 = Position (+)
TB1-9 = Position (–)
TB3-3 = Position (Shield)

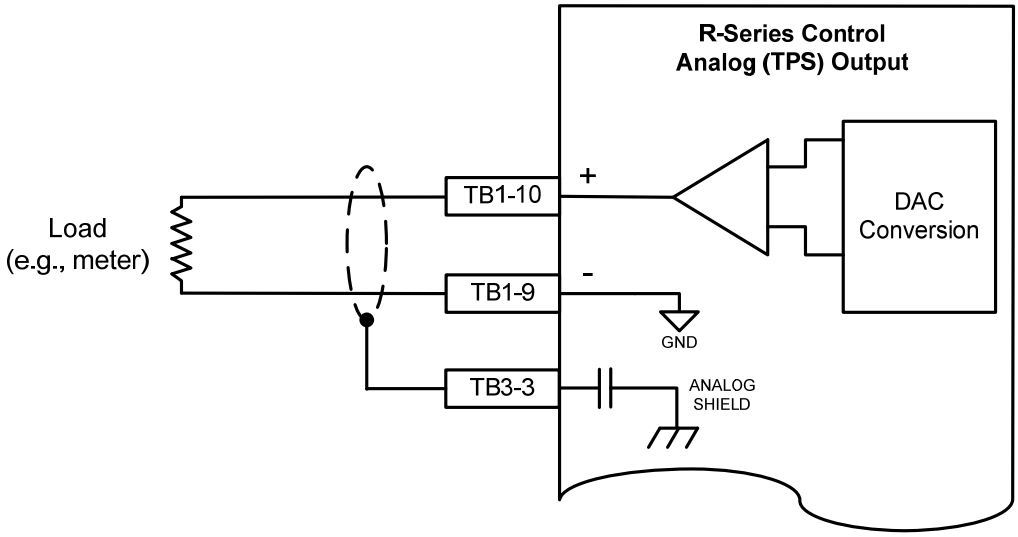

Figure 3-10. Analog Output

The R-Series actuator provides a 4 mA to 20 mA output signal representing the actual shaft rotational position. The output current is a linear function of shaft position, with configurable scaling. Typically, 4 mA indicates 0% position and 20 mA indicates 100% position. To ensure the full range of output current, the maximum load resistance is 480 Ω.

For the analog output wiring, the Analog Out (–) connection pin is internally connected to Input Power (–). Therefore, Analog Out (–) should only be used when the user's controller contains a differential input or isolated input. Otherwise, a ground loop may exist, assuming the user's controller power ground is common to the R-Series power ground (Input power –). If the analog output is used with a Differential or Isolated input, the Analog Out (–) must be used or the system will not function. If the analog output is not used with an isolated or differential input on the user's end (i.e. single ended), there is no connection to Analog Out (–) as the return path is through the common system/power ground back to R-Series Input Power (–).

The analog output scaling is configurable in software, refer to the Service Tool (Chapter 7) for details.

WARNING

Verify Position

It is recommended that the analog output be used to externally verify that the position command and subsequent actual position matches the command signal sent. In addition to a positioning error validation, the analog output signal should be monitored to detect out-of-range errors on the analog output. Failure to comply with this recommendation can result in undetected system faults, and in extreme cases, can cause personal injury and/or property damage.

IMPORTANT

Analog output monitoring must account for lookup table correction, when this table is used. The analog position output represents actual shaft position. When the 11-point position lookup table is used, actual position will likely vary from commanded position.

Analog Input

TB3-1 = Analog Input/Command (+)
TB3-2 = Analog Input/Command (–)
TB3-3 = Analog Input (Shield)

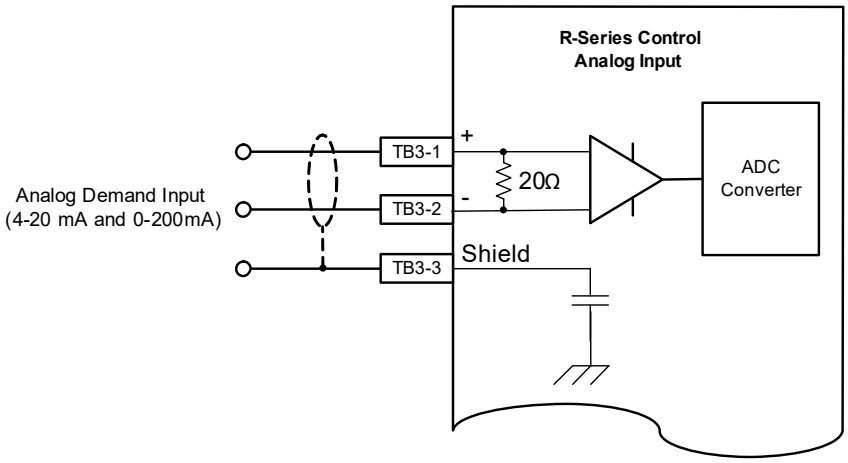

Figure 3-11. Analog Input

The Analog input can be configured for use as a 4-20 mA or 0-200 mA type position command input. The analog input range, scaling, and diagnostic thresholds are configurable software settings, refer to the Service Tool (Chapter 7) for details.

This input employs over-current protection that will internally open the current loop if the trip thresholds are exceeded in both 4–20 mA and 0–200 mA modes. These fault trip levels are well outside of normal operating demand currents and can be found in Appendix D under ‘Analog Input’. The circuit will periodically attempt to close to test whether the fault still exists, and once the source of the fault is cleared, the circuit will close and resume normal function.

WARNING **Sudden Movement**	**The analog input circuitry is self-protecting for over-current situations. If an over-current situation occurs, it will open the circuit to protect against potential damage. The actuator will go to min position when this occurs. The circuit will periodically (~800 ms intervals) attempt to restart and will do so until the source of the over-current fault is removed. Slight movement of the output shaft may be noticed during the restart attempts.**

Status Output

TB4-1 = Discrete Output (+)
TB2-10 = Discrete GROUND

The discrete output state can be configured to indicate when a shutdown is active, when an alarm is active, or when either condition is active. Additionally, it can be set as normally-energized, de-energize for fault, or vise-versa. Refer to the Service Tool (Chapter 7) for configuration details. The status output can provide a status indication to a control system or an operator panel.

The electrical circuit can be either sourcing (high-side) or sinking (low-side) output. When high–side, the output load must be connected between the discrete output pin and the discrete ground connection of the R-Series actuator. If the load requires a maximum of 250 mA, it can be driven directly from the output. It is possible to drive a relay with the discrete output if more current is needed for the load.

When used as a low-side output, the load must be tied to either the battery source or independent source that is also referenced to the system ground. Both the low-side and high-side output options are internally current limited to self-protect against short circuit or other over-current situations; however please select the load not to exceed 250 mA.

When the status output is in over-current mode, there will be slightly different behavior whether the output mode is sourcing (high-side) or sinking (low-side). During an overload condition in sourcing mode, the load will simply be disconnected internally until the current falls below the trip threshold. During an overload condition in sinking mode, the discrete output will oscillate at approximately 21 kHz to help reduce overheating of internal components. This may cause a ‘buzzing’ of the load if using a relay, or possibly an LED flickering at a low intensity. In both modes, when the source of the over-current fault is cleared, the circuits will resume normal function.

The thresholds where the over-current fault trip occurs can be found in Appendix D under ‘Status Output’.

Figure 3-12. Discrete Output

WARNING

Sudden Movement

Stay clear of the actuator output shaft and all equipment that may be actuated by the Discrete Output, as sudden movement can occur at any time. Failure to comply with this recommendation can cause personal injury and/or property damage.

IMPORTANT

The high-side discrete output is driven directly from the battery power. Be mindful when attaching the discrete output to a load that the load is capable of handling battery potentials along with all of the various transients that can occur. It may be necessary for the end user to add additional external transient protection to the load if there is a concern of electrical over-stress.

Discrete Inputs

TB2-7 = Discrete Input 1 (Run/Stop)
TB2-8 = Discrete input 2 (CAN ID Low)
TB2-9 = Discrete input 3 (CAN ID High)
TB2-10 = Ground

There are three discrete inputs on the R-Series control. The input functions are dedicated as listed above. All three discrete inputs are the same electrical circuits. Each discrete input can be configured in the software for a high side or low side switch and for an active closed contact or an active open contact. Refer to Chapter 7 for discrete input configuration details.

High Side Switch, (default)
If used as a high side switch, the switch contact must be connected to the discrete input pin and to the Aux Power pin (supply plus) of the actuator. The high side switch configuration is preferred.

If it is necessary to use an external power supply instead of the R-Series actuator Aux Power, then the negative connection of the independent power supply must be tied to the actuator negative power input pin.

Low Side Switch
If used as a low side switch, the switch contact must be connected to the discrete input pin and to the Ground pin of the actuator.

If it is necessary to locate the discrete input contacts more than 10 meters from the actuator, then the actuator input power negative pin must be used instead of the ground pin.

Active Closed, (default)
Active closed can be used for situations where it is safer to make the function inactive if the wire is broken or disconnected.

Active Open
Active open can be used for situations where it is safer to make the function active if the wire is broken or disconnected.

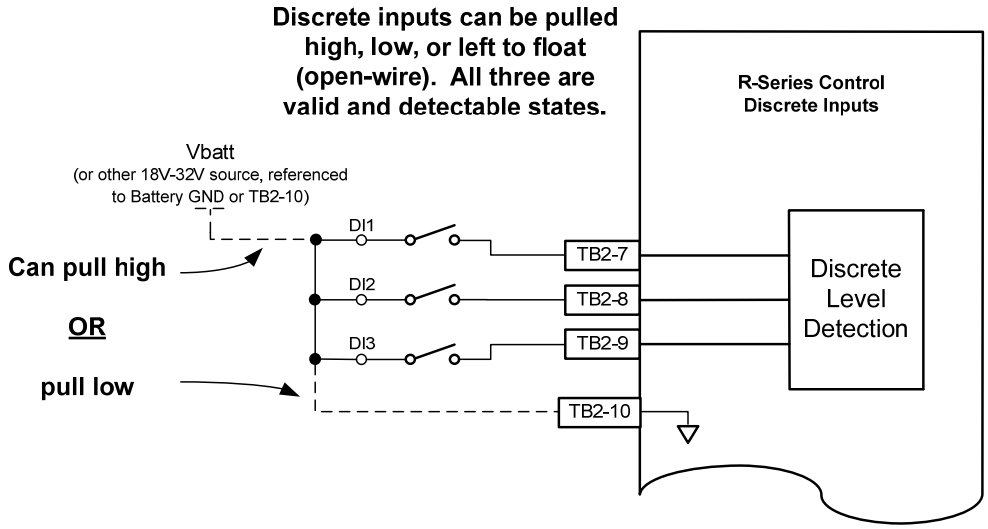

Figure 3-13a. Discrete Inputs

The action of each discrete input can be individually configured, using active low/high and active open/closed settings. Examples of each combination are shown in Figure 3-13b and c. The diagrams illustrate the condition to generate a logic 'true' state. An unconnected input is considered not active. When set to 'active closed', it is determined to be low/false (not high). Similarly an unconnected input is determined high/true when set to 'active open'.

Run/Stop

Discrete input 1 can be optionally used as a Run/Stop input. When the input is true, a run is commanded and when it is false a stop is commanded. The input has three states, connected to power (PWR), connected to ground (GND), and unconnected. The following figures aid in understand the RUN and STOP conditions for each configuration.

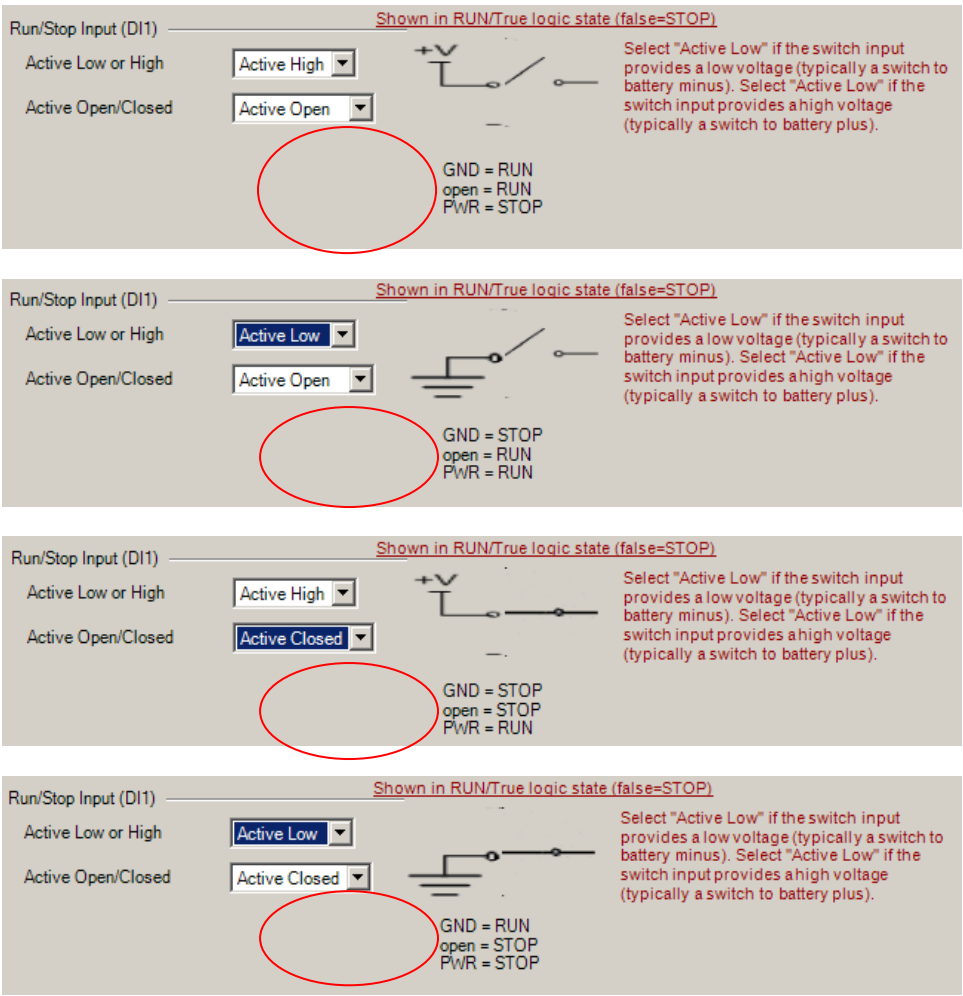

Figure 3-13b. Run/Stop Discrete Input Examples

CAN ID Low and CAN ID High

Up to four R-Series controls can be on the same CAN bus, however, each must have a different device address. The CAN device address is determined by using the CAN ID HI and LO discrete inputs upon power-up of the unit (see Table 3-2). Message configuration of each address (unit 1-4) is provided using the Service Tool (see CAN in Chapter 7). The state of each input (low, high, unconnected) and the selected address are displayed on the Service Tool to aid in troubleshooting.

As an example, Unit 2 is selected when CAN ID HI is false and CAN ID LO is true on power-up.

Table 3-2. R-Series Control CAN Address

R-Series Control Address	Unit 1	Unit 2	Unit 3	Unit 4
CAN ID HI	false	false	true	true
CAN ID LO	false	true	false	true

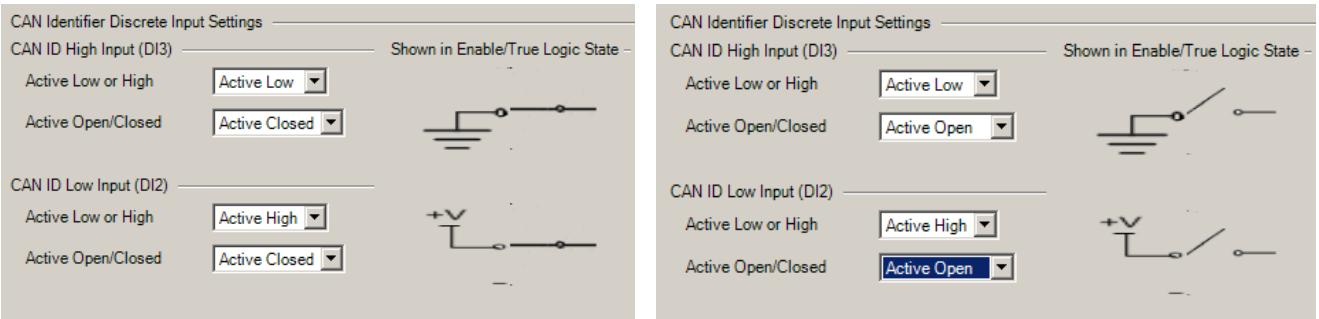

Figure 3-13c. CAN ID Discrete Input Examples

CAN Communication

CAN1 High Input: TB1-4
CAN1 Low Input: TB1-5
CAN Shield: TB1-6
CAN2 High Input: TB1-7
CAN2 Low Input: TB1-8

The CAN (Control Area Network) communication link is used for supervisory control and monitoring of the actuator position and for possible I/O expansion. It is also used for connecting the PC Service Tool (ToolKit) to the R-Series for configuration and/or troubleshooting. Appropriate wiring for use with a supervisory control is shown in Figure 3-14. Woodward recommends using only CAN network cable that is rated for SAE J1939-11. CAN1 provides both CAN (either CANopen or J1939) communications and Service Tool communications. CAN2 is an optional Service Tool port only (no J1939 or CANopen).

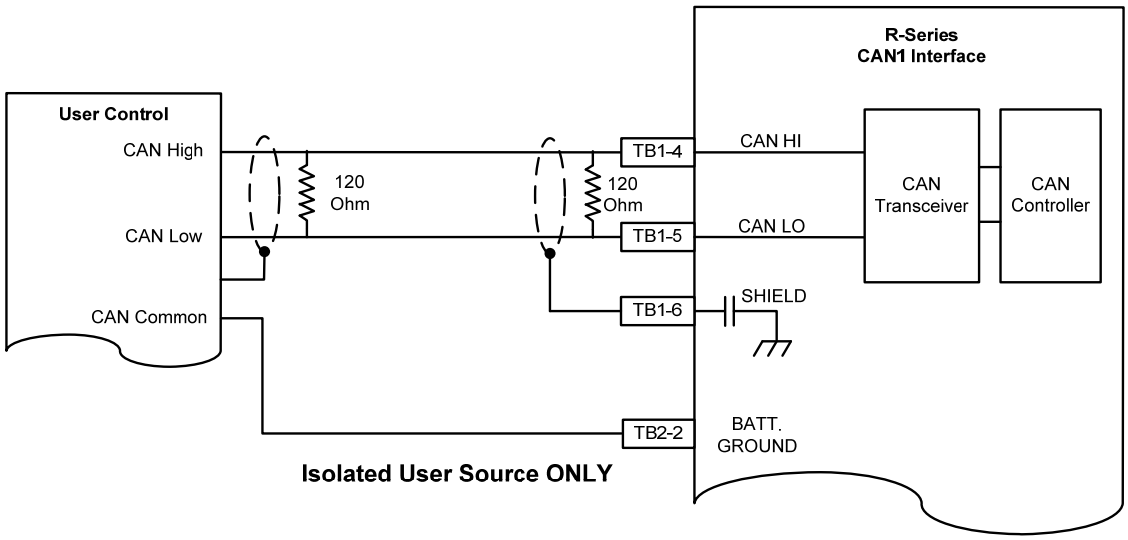

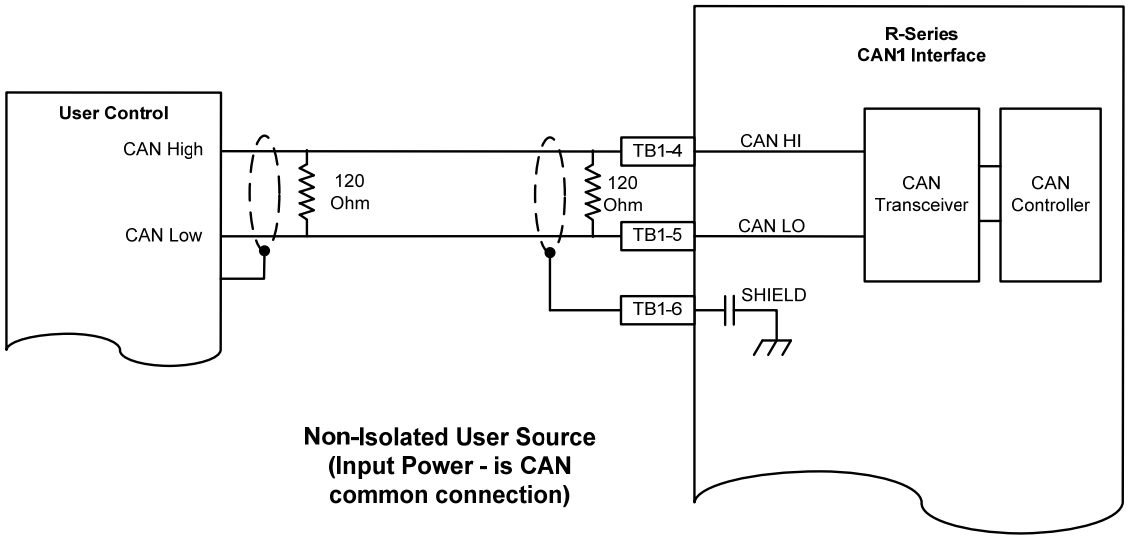

NOTE: The above wiring also applies to CAN2.
For CAN2, use TB1-7 (CAN HI) and TB1-8 (CAN LO)

Figure 3-14. Typical CAN Wiring for R-Series Actuators

Usage of a 120Ω, 1 Watt termination resistor across CAN High and CAN Low, positioned as close as possible to the actuator is necessary if the R-Series actuator is the last device at the end of the CAN bus.

The use of CAN bus cable that meets SAE J1939 specifications for impedance and shielding properties is required for the CAN communication. The battery minus signal and the shield signal are not connected and therefore the shield cannot be used as a common signal between the controls.

To prevent ground loops, the shield connection is not hard wired to the chassis. The shield is terminated in the R-Series actuator through a high-frequency capacitor. The shield must be connected to the earth ground in the wiring harness to improve EMC performance. See Figure 3-15.

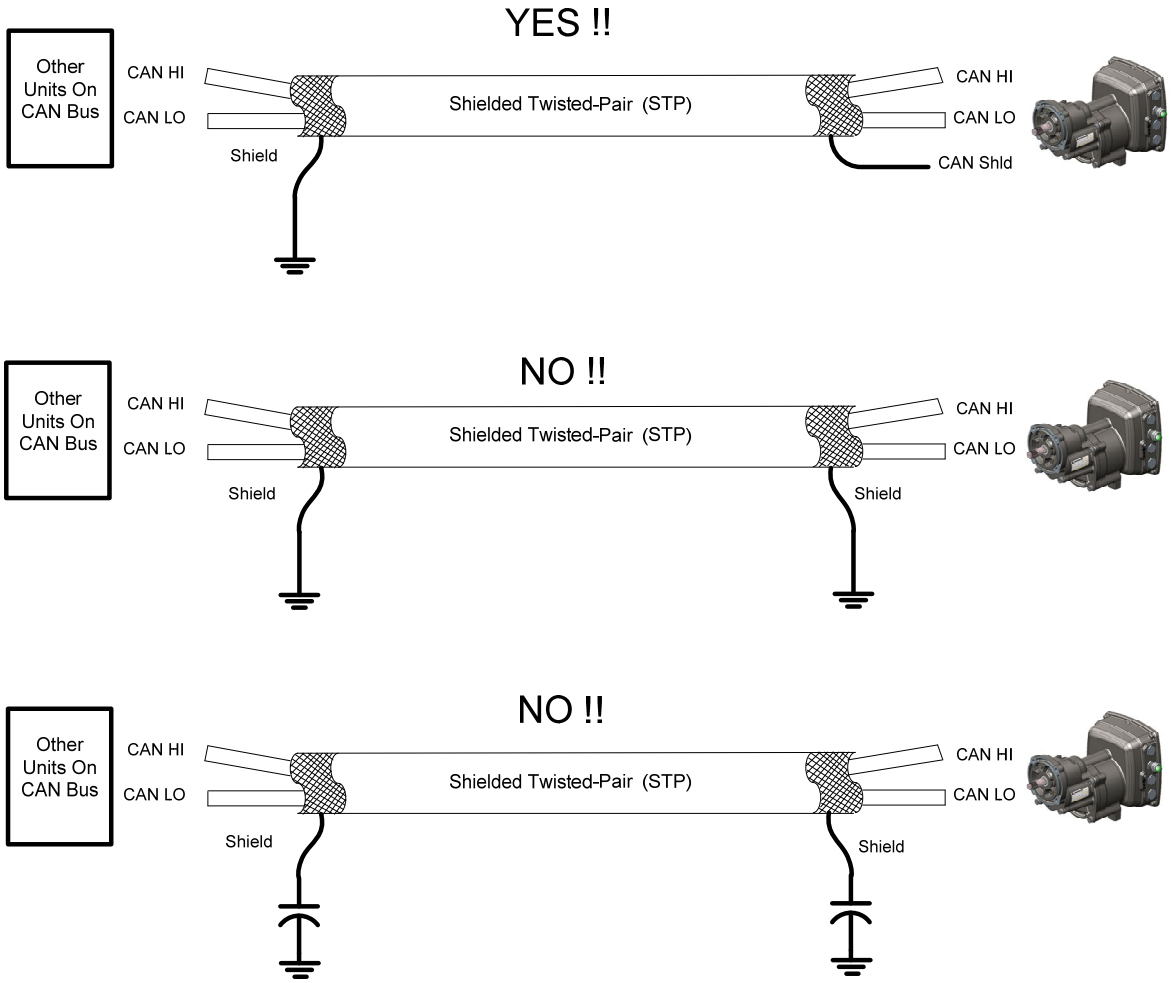

Figure 3-15. CAN Shielded Wiring

The R-Series CAN network is also the means for establishing a connection with the product's PC Service Tool. CAN1 or CAN2 can be used for Service Tool connection.

NOTICE **Service Tool Usage**	**If the CAN bus that is connected to CAN1 is already heavily loaded with other devices and traffic, it is advisable to use CAN2 for connection with the Service Tool to avoid overloading bus traffic. CAN bus traffic overload can lead to communication and functionality problems.**

Service Tool connection to a PC is accomplished through the use of a USB to CAN converter and a breakout adapter. While other options may be available, Woodward has tested functionality with a Kvaser LeafLight HS v.2 (5404-1189) as suitable for use with the R-Series actuator. The LeafLight v.2 will require the use of a breakout cable to adapt the 9-pin D-Sub connector to the individual terminals in the R-Series wiring cavity. A termination resistor adapter is also recommended for ensuring communication quality. This adapter cable (Woodward # 5404-1376) and the CAN termination resistor (Woodward #1249-1271) are also available from Woodward or sold as a kit with the Kvaser LeafLight as **8923-2170**.

Figure 3-16 shows how to connect the converter and adaptor between the PC and the R-Series.

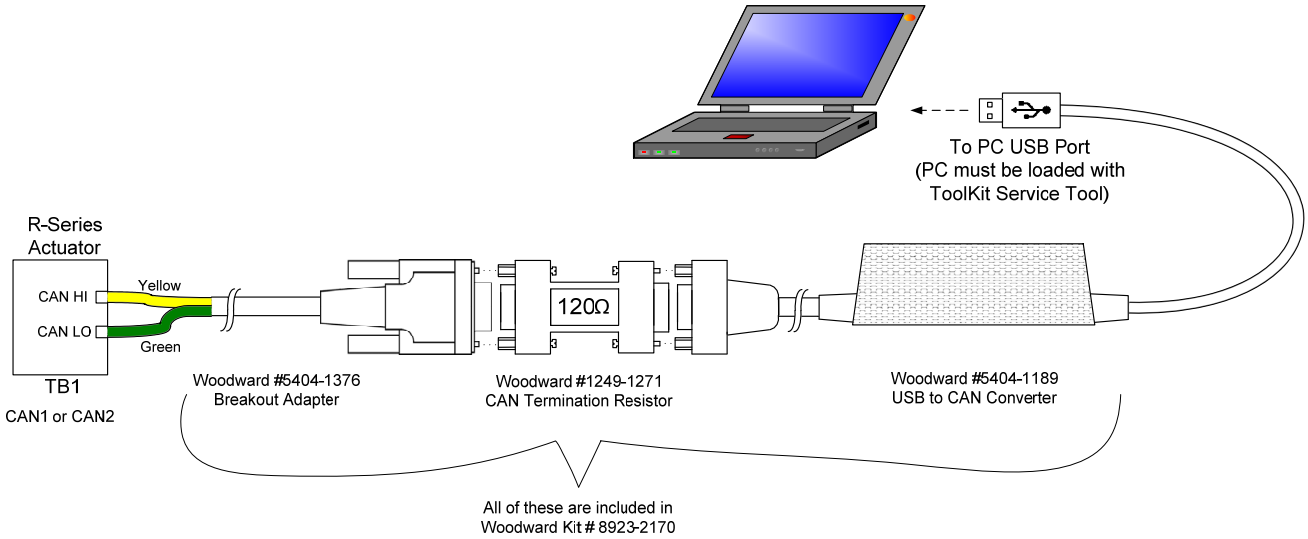

Figure 3-16. CAN Wiring for Service Tool Usage

See Chapter 5 for more information regarding CAN implementation in the R-Series. Appendix A provides SAE J1939 settings for typical applications. Chapter 7 provides details for protocol and configuration of the CAN settings for each R-Series actuator on the network.

Chapter 4.
Description of Operation

General

The R-Series actuator is ready for operation when the power supply is connected and the keyswitch input goes high. Power may be connected to the control at the same time the engine starter is engaged. The actuator will power up in a stable and predictable manner whether a command signal is present or not. Upon power-up, the actuator will immediately (within 300 milliseconds) begin moving to the commanded position.

Upon an engine shutdown command, the independent engine shutdown solenoid or solenoid valve in the fuel supply should be de-activated to stop the flow of engine fuel. This engine shutdown signal should be sent directly from the engine control panel and should be independent and separate from the R-Series control.

NOTICE	**As a best practice, the R-Series should be cycled through the full range of motion every 24 hours of operation. This is intended to keep lubricant on all internal parts and prevent excessive wear on certain locations within the actuator's drive train.**

Position Control

The R-Series actuator provides closed-loop position control based on an internal position sensor and the desired position command signal. Software model-based position and current controllers are utilized to position the output. Position control is provided using a customer's position command, an internal position feedback sensor and an internal driver output. The actuator provides a 4 mA to 20 mA analog output for indication of actual actuator output shaft position.

Driver Input Power

The R-Series actuator operates at full-specified torque over a voltage range of 18 to 32 VDC. The actuator is functional below 18 VDC and temperatures less than 0 °C, but accuracy and/or torque can be diminished at these conditions. The actuator tolerates input voltages as low as 12 VDC without resetting the internal processor.

The supply voltage fault low and high thresholds are configurable. The unit can be configured to either alarm or shut down upon detection of a supply voltage fault.

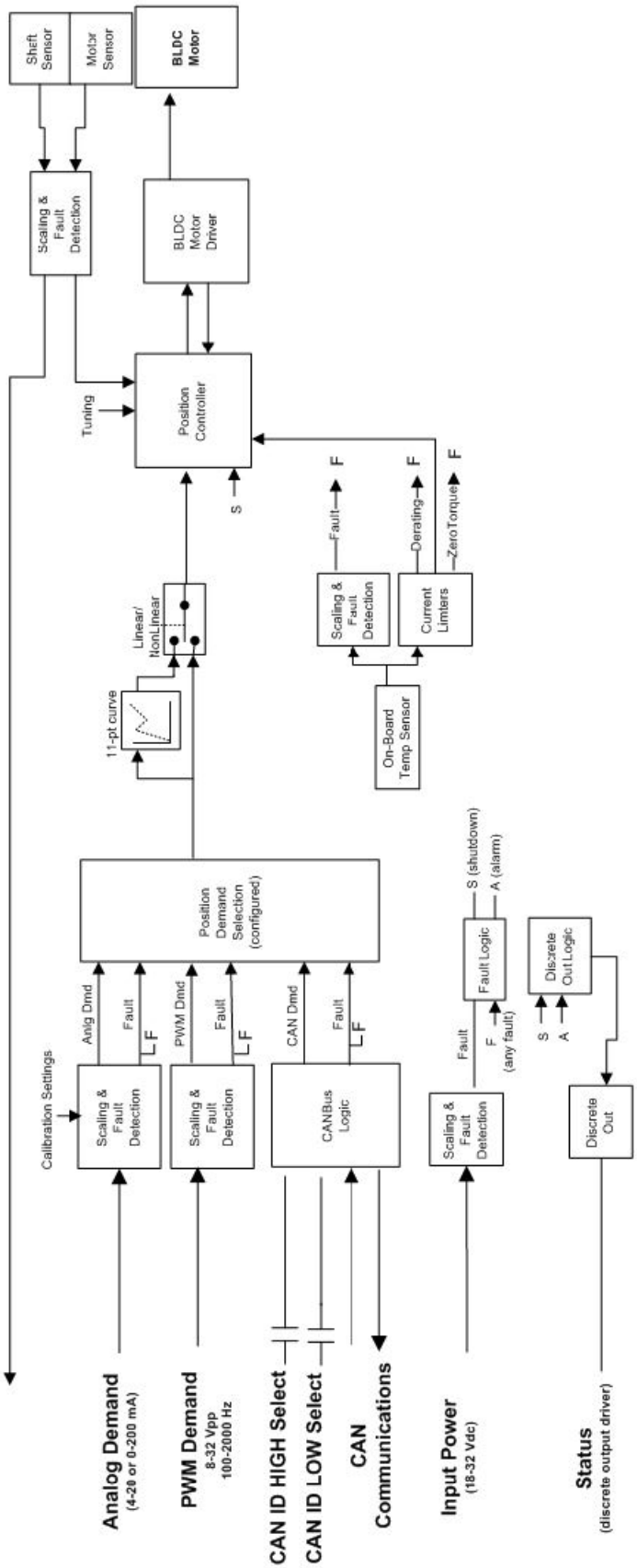

Figure 4-1. Functional Overview

Position Demand Signal

The R-Series can accept either a single position command or a redundant position command. A redundant command uses two position commands, one as the primary command and one as a backup. If the primary should fail, the unit could continue to run using the backup command. The command source can be sent over CAN (J1939 or CANopen), as a PWM command signal input, or an analog (4–20 mA or 0–200 mA) command signal input, depending on how the software application is configured.

A low-pass Position Demand Filter can be configured in the software. The filter cut-off frequency has an adjustable range of 1 Hz to 20 Hz.

The position demand input can be optionally set to use a non-linear mode which provides an 11-point curve relationship between position signal and desired position. The same curve relationship will be used for any demand input type.

The unit can be configured to either alarm or shut down on detection of a position command failure (loss of all position command inputs). Failure of one command source, when redundant commands are used, will result in an alarm and the unit will continue to operate using the remaining healthy command signal.

PWM Input

The PWM input can be configured to function with low-side open collector, high-side open collector, and push-pull source types. It will handle a PWM frequency range from 100 Hz to 2000 Hz at amplitudes ranging from 8 V to 32 V. The scaling and input failure levels are user-configurable.

A user-configurable offset is available to adjust the input duty-cycle reading, as needed. This feature is used to compensate duty cycle measurement error resulting from slow signal edge transitions.

CAN Demand

The CAN position demand is configured in the software and hardware. For software configuration instructions see Chapter 7. For hardware configuration instructions see Chapter 3, CAN ID discrete inputs and CAN Communications.

When used as a position command, a minimum update rate is expected or a CAN fault will be issued. This update rate is user-configurable.

Analog Input

The analog input type (4-to-20 mA or 0-to-200 mA) is configured in the software, for software configuration instructions see Chapter 7.

The input is monitored for out of range condition and the failure levels are user configurable.

WARNING **The non-latching non-redundant position command failure action can lead to a situation where the system is rapidly cycling between two states.**

Position Command Redundancy

The position command redundancy determines a commanded position based on the two possible configured inputs - the primary or backup command selection of CAN, PWM, or Analog. It provides failover (primary-to-backup) and fallback (backup-to-primary) logic. Indications are provided for monitoring of the operating status. These two inputs are expected to track each other such that failure of one signal will not disrupt overall system operation.

The command redundancy utilizes two command inputs; a primary command and a backup command (see Figure 4-2). When both inputs are within normal ranges, as determined by user-configurable failure settings, the primary command is selected and used. If the two input position commands differ by more than the configured maximum difference, then one is flagged as failed and the other command is used. The selected (primary or backup) command is user-configurable. In addition, a tracking error diagnostic can be utilized to ensure the inputs are tracking each other.

The following operating status indication is provided on the Service Tool and over CAN.

- **Primary Demand Used**—Indicates the primary demand is selected and the backup demand is either not used or not failed.
- **Primary Demand Used, Backup Failed**—Indicates the primary demand is selected and the backup demand is either failed or is not tracking the primary demand per the demand tracking configuration settings.
- **Backup Demand Used, Primary Failed**—Indicates the backup demand is selected and the primary demand is either failed or is not tracking the backup demand per the demand tracking configuration settings. Note that the chosen input when the difference is exceeded is configurable.
- **Primary Enabled but not active**—Indicates the backup demand is selected but the primary demand will become active after a configurable signal healthy (failback) delay.
- **All Demands Failed**—Indicates both the primary and backup (if used) demands are failed (out of range).

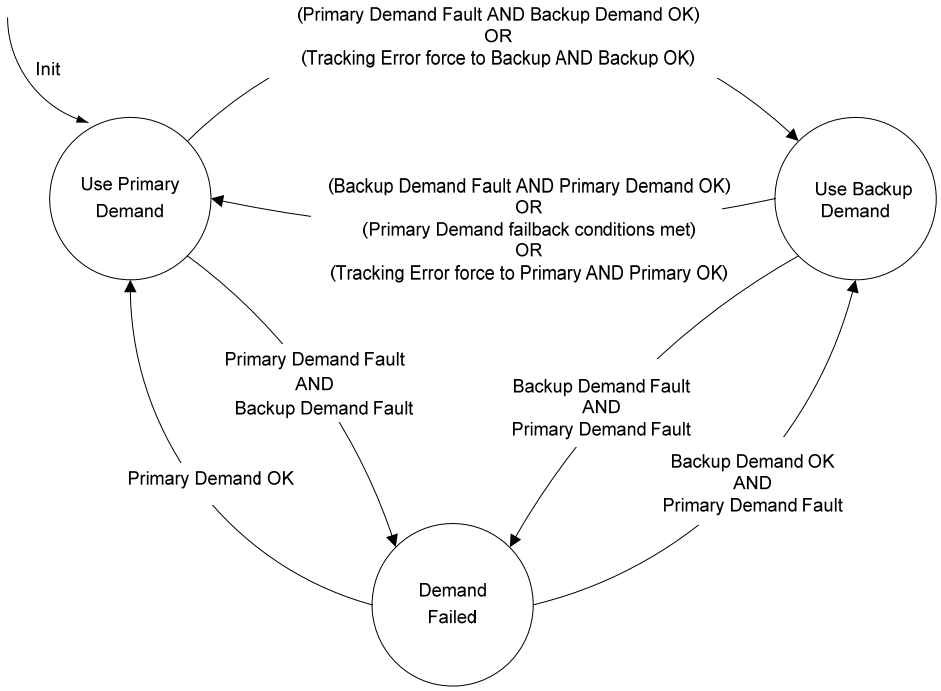

Figure 4-2. Position Demand Logic

Actuator Output

The R-Series actuator is configurable for clockwise (CW) or counterclockwise (CCW) rotation. Direction of rotation is determined by looking at the output shaft end. See Chapter 6 for setup instructions.

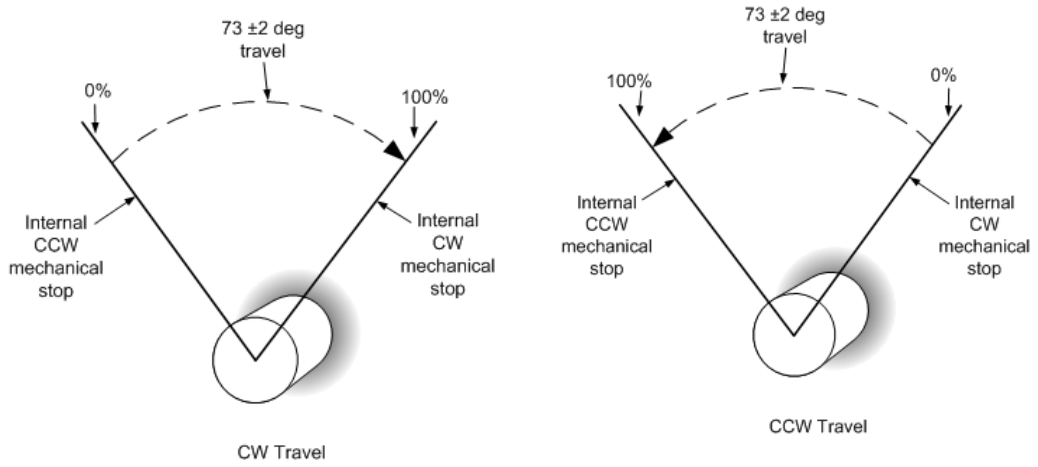

Figure 4-3. R-11 and R-30 Actuator Travel

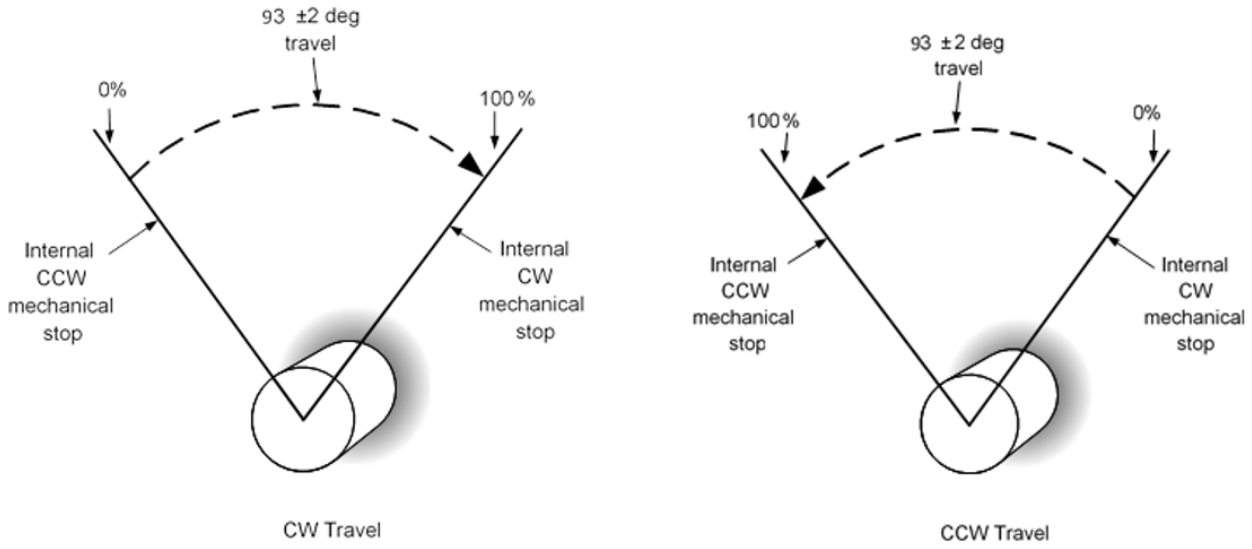

Figure 4-4. R-120 Actuator Travel

Analog Output (TPS)

The R-Series actuator provides a 4 mA to 20 mA analog output signal representing actual shaft rotational position, with configurable scaling. Typically, a 4 mA to 20 mA signal corresponds to 0% to 100% position. The actual position of the actuator output shaft relative to the analog output reading is at worst case accurate to within ±2.36% of full stroke after all effects from –30 to +105 °C board temperature, increasing to ±6.0% below –30 °C for all input types.

Additional command and feedback errors can be determined using the following diagrams.

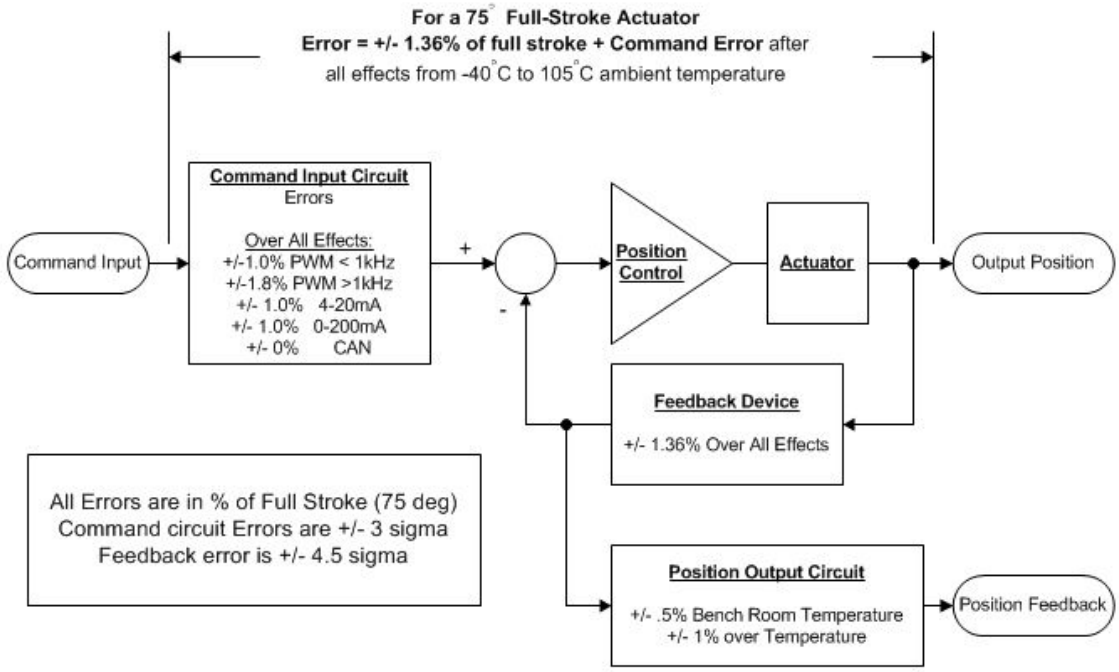

Figure 4-5. Command and Feedback Error Flow - 75° Position Accuracy

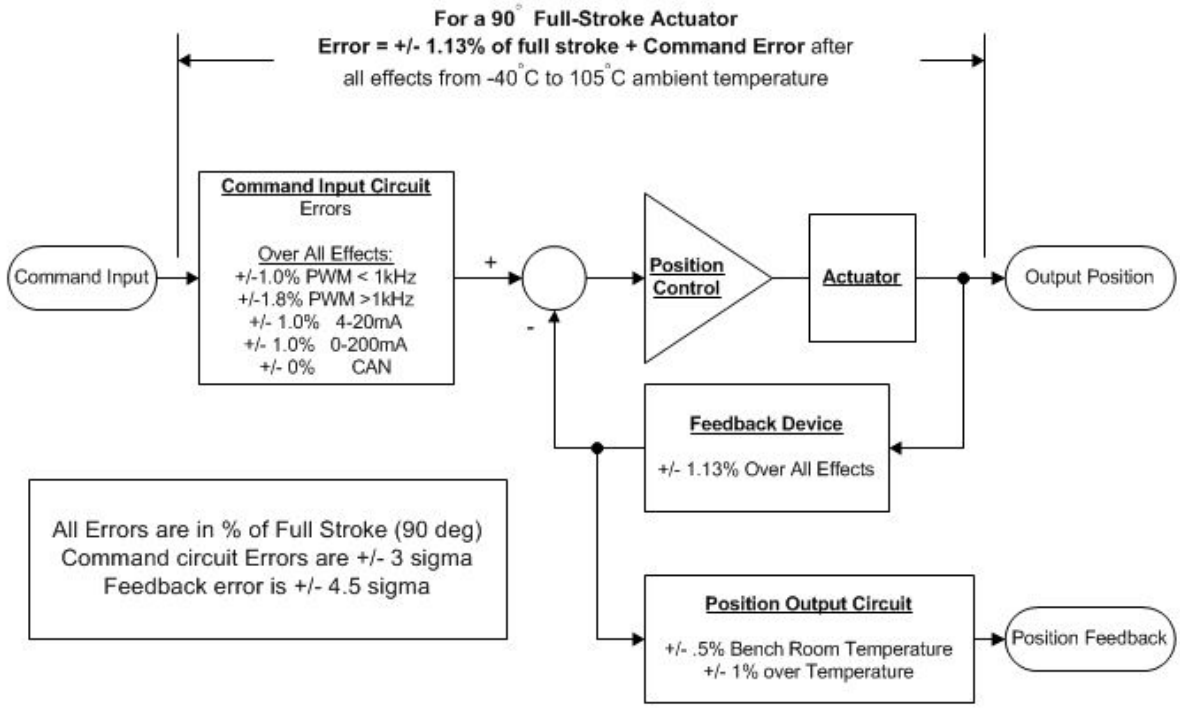

Figure 4-6. Command and Feedback Error Flow - 90° Position Accuracy

Discrete Output

The discrete output can be configured as either a high-side or a low-side driver that changes state upon a detected driver fault. The discrete output can be configured to indicate an alarm and/or shutdown condition in the actuator. It can also be configured as normally on (preferred failsafe setting), normally off or always off. This output can provide a useful diagnostic signal for monitoring the engine. It can also be used to shut down the engine by external means separate from commanding the actuator to the minimum position or to a zero current condition.

There are two conditions that will prevent the discrete output from operating correctly. The first is if battery positive is accidentally connected to it, and the second is if it is shorted to ground. The circuit will protect itself in the event of a wiring error, but it will hold the output open (floating) until the fault is removed.

Run/Stop Input

An optional Run/Stop function is available to externally command a shutdown. This function input can be performed using a CAN command, a discrete input, or disabled completely. This function will execute the shutdown action without triggering a common shutdown indication.

When a discrete input is selected, the input is configurable as either active high (default) or as active low (active is a Run selection and inactive is Stop). The input switch action can be configured as active when the switch is closed (default) or when the switch is opened.

Service Tool (CAN) Communications

CAN communication is used to communicate to the R-Series Service Tool. Functions available through this port include troubleshooting, setup, tuning and configuration of the R-Series control. Detailed driver status information is also displayed. See Chapters 6 and 7.

Temperature Sensing

The R-Series actuator monitors board temperature with on-board temperature sensors to protect the unit from over temperature. Internal monitoring also provides temperature level indications for temperatures exceeding the torque de-rating limit and 125 °C (see current limiting). If the temperature sensor is determined as failed (> 140 °C or < –45 °C), a default value of 20 °C is used internally and an alarm is annunciated.

Current Limiting based on Temperature

The controller provides actuator current limiting based on the electronics temperature. Dependent on board and actuator thermal models, the software turns off current when conditions are present that would damage the unit due to extreme temperatures.

WARNING

When the internal temperature of the R-Series returns to 125 °C or lower, there may be a sudden movement to the latest command position.

Sudden Movement

Current limiting based on temperature occurs when the combined current and temperature environment causes board temperatures greater than 118 °C (122 °C in software versions prior to 5418-7415). The normal actuator steady-state current limit is de-rated linearly between 118 °C and 125 °C, with zero current at 125 °C. The actuator returns to normal operation, current is no longer limited, when the board temperature is 118 °C or lower.

Transient Torque Capability

The R-Series actuators are capable of rated transient torque for a maximum of 2 seconds. The length of time that the unit will provide rated transient torque is a function of the output of the unit prior to initiation of full-transient-torque demand. The time-based output of the LRU is limited to avoid self-damage and the LRU will fall back to the rated steady-state torque when the limit has been reached. In a healthy unit, steady-state torque output is available independent of preceding demand.

Position Control near the Mechanical Stops

When operating very near the mechanical actuator stops, the R-Series controller is capable of switching from position control to current control. This feature is a configurable option. If the controller's measured position is seen to move away from the stop, the unit will return to active position control in order to move back to the stop, where current control is resumed. Similarly, if the commanded position moves away from the stop, active position control will resume. The amount of current used for holding against each mechanical stop is user configurable. See 'On Stops' settings in Chapter 7.

Position Error Handling

If configured for use, the R-Series actuator detects and triggers a position error between the position set point and the actual position of the actuator shaft. The difference threshold, delay time, and fault action are configurable.

Position Sense Deviation

Two position sensors are utilized within the R-Series actuator, a shaft position sensor and a motor position sensor. If configured for use, the R-Series will detect and trigger a position sense deviation difference between these two sensors.

Fault Detection and Annunciation

⚠WARNING

It is recommended that all faults be configured as shutdowns to ensure maximum fault protection.

Configuring some diagnostics as a non-latching shutdown can result in unexpected behavior. In some cases the diagnostic condition may disappear while the unit is in the process of shutting down, allowing the system to resume operation. This can result in wide pressure and speed fluctuations. It is highly recommended that the control system latch any shutdown it detects via the discrete output to prevent unexpected behavior.

The diagnostics screens on the R-Series Service Tool display the status of both active and previously active fault conditions including an occurrence counter and time of last occurrence. These indications are stored in non-volatile memory and provide a history of events even after the unit has been power-cycled or run again.

Numerous faults can be configured as ignored, alarm, or shutdown on occurrence. An alarm basically does nothing but annunciate the fault. A shutdown will follow the configured shutdown action, either going limp or forcing the actuator to a predetermined position regardless of the demanded position. Faults can be globally set as either latching or non-latching. When set as latching, the fault action continues until the control is reset. The latched state persists through a power cycle. Shutdown faults must be reset to allow the unit to restart. If non-latching, the actuator is returned to a non-shutdown state when the shutdown condition no longer exists.

WARNING

A non-latching shutdown configuration can lead to a situation where the system is rapidly cycling between two states and should be used with caution.

NOTICE

Setting the faults to 'ignore' will do just that. Any fault set to 'ignore' will NOT be annunciated in the Service Tool, over the CAN link, or through the Discrete Output, if used.

Woodward recommends using the actuator's fault detection feature with 'shutdown' as the resulting action. This will give the greatest amount of protection in a fault situation. If the severity of the fault does not warrant a shutdown, an 'alarm' setting will still provide the user with annunciation.

Active Faults are those presently detected or previously detected but latched and not reset. The configuration as latching/non-latching faults factors into this indication. If the fault is latching, then an active fault could either be one that is still present or one that had occurred but is now normal and has not been reset.

When active faults are configured as non-latching, a reset is not needed. If latching faults are configured, a reset command is required to clear the fault. A reset command is accomplished using the Clear Active button on the Service Tool or by issuing a Reset Active Diagnostic command over CAN.

Parameters are available to configure a fault to be used or ignored and, if used, to be configured as an alarm or shutdown. The shutdown action performed is fault-dependent. Some faults are dedicated as shutdowns only and cannot be configured—they are identified as such below.

A previously active fault is one that has occurred but is no longer active or latched in the control. Previously active faults are non-volatile and can only be cleared by selecting the 'Clear Logged' button on the Service Tool or by issuing a Reset Diagnostic command over CAN.

The diagnostic event manager on the Service Tool displays each fault as it occurs and continues to display the fault until the previously active (logged) fault is cleared. See figure 4-5. The event manager displays the time of last occurrence, an occurrence counter, the fault type (alarm/shutdown), and the fault status (active/previously active). Faults can be individually or globally cleared, with the Clear Active (selected) and Clear All Active commands.

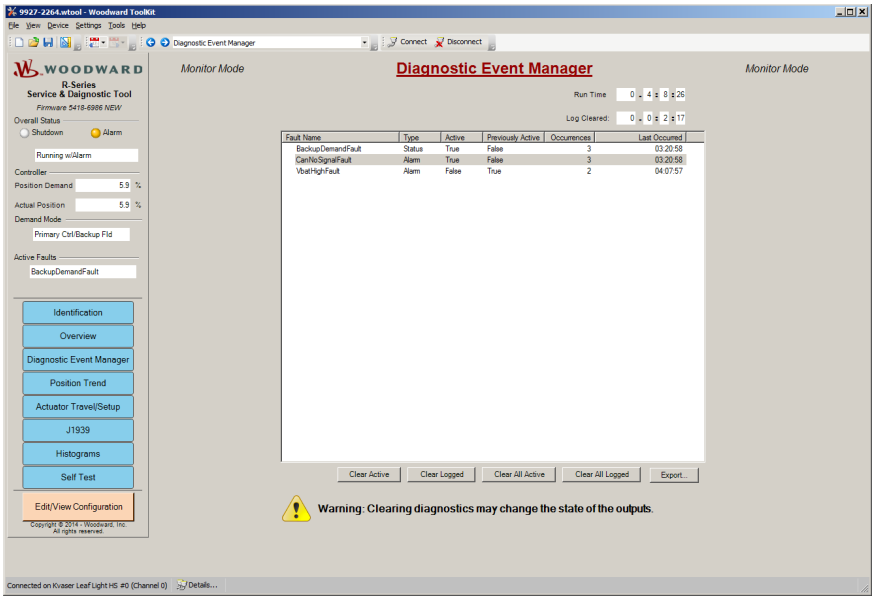

Overview of Individual Diagnostics

Diagnostics detected are grouped into 3 categories: alarms, shutdowns, and status indications. Some diagnostics have a fixed action (e.g., always a shutdown), some are configurable, and others are automatically assigned when they are configured for use. For example, the PWM Demand High diagnostic is always an alarm, but only active if PWM demand is configured for use.

Dedicated (Fixed Action) Diagnostics

The following fixed action diagnostics are provided. They are grouped into three categories, shutdown, alarm, and alarm when configured.

Shutdown conditions:

- Shaft Position Sensor Failed (Internal Fault Shutdown condition)
- Motor Position Sensor Failed (Internal Fault Shutdown condition)
- NV Memory Fault (Internal Fault Shutdown condition)
- Zero Torque condition (high internal temperature)

Alarm conditions:

- Electronics Temperature Failed Low
- Electronics Temperature Failed High
- Torque Derating Active
- Configuration Error (Internal Fault Alarm condition)
- Coil Current Error (Internal Fault Alarm condition)

Alarm conditions, when configured for use:

- Analog Demand High
- Analog Demand Low
- PWM Demand High
- PWM Demand Low
- CAN No Signal
- CAN Bad Signal
- Demand Tracking Error

Configurable Diagnostics

The following configurable diagnostics are provided. The action is user-configurable as shutdown, alarm, or ignore. The 'Type' indication in the Event Manager component of the Service Tool will display the configured fault action for each indication listed (see examples in Figure 4-7).

Loss of All Position Demands
Input Supply Voltage High
Input Supply Voltage Low
CAN Bus Off
J1939 Address Claim Error
Sense 12 V fault (internal voltage monitor) (Internal Fault condition)
Discrete Output diagnostic fault
Position Sense Deviation (motor-to-shaft) (Internal Fault condition)
Position Error (demand-to-actual position)

Status Indications

The following status indications are provided. These indications have a 'Type' equal to "Status" in the Event Manager component of the Service Tool.

Stop Commanded (Run/Stop discrete input)
CAN Stop (Run/Stop) Commanded
Primary Demand Fault
Backup Demand Fault

Individual Diagnostic Details

The following section provides details on each diagnostic condition.

Input Voltage High

Indicates the input supply voltage went above the configured Input Voltage High Threshold.

Fault Name: VbatHighFault
Failure Levels: user-configurable
Persistence: 500 ms + user-configurable delay
Diagnostic Filtering: 500 of 1000 samples, 1 ms sample rate + user-configurable delay
Fault Type: Ignore, Alarm, or Shutdown, user-configurable

Input Voltage Low

Indicates the input supply voltage went below the configured Input Voltage Low Threshold for the configured delay time.

Fault Name: VbatLowFault
Failure Levels: user-configurable
Persistence: user-configurable
Fault Type: Ignore, Alarm, or Shutdown, user-configurable

Loss of Position Demand

Indicates all configured position demand signals are determined to be failed, both the primary and the backup (when used).

Fault Name: LossOfDemandFault
Permissive: not in test mode
Fault Type: Ignore, Alarm, or Shutdown, user-configurable

Primary Demand Fault
Indicates the demand source configured as primary is determined to be failed. This status indication will coincide with the corresponding demand failed alarm.

Fault Name: PrimaryDemandFault
Fault Type: Status

Backup Demand Fault
Indicates the demand source configured as backup is determined to be failed. This status indication will coincide with the corresponding demand failed alarm.

Fault Name: BackupDemandFault
Fault Type: Status

Demand Tracking Error
Indicates all primary and backup demand signals are not within the configured tolerances, exceeding the Tracking Error Max for longer than the Tracking Error Delay.

Fault Name: DemandTrackingFault
Permissive: demand tracking error (and redundancy) configured for use
Failure Levels: user-configurable
Persistence: user-configurable
Fault Type: Alarm

Position Error (demand-to-actual position)
Indicates the position feedback is not following the position demand. Position Error detection logic is designed to account for normal actuator response times to prevent unwarranted position error indications during transient conditions. Difference must exceed the error threshold for the delay time.

Fault Name: PositionErrorFault
Failure Levels: user-configurable
Persistence: user-configurable
Diagnostic Filtering: 700 of 1000 samples, 1 ms sample rate
Fault Type: Ignore, Alarm, or Shutdown, user-configurable

Analog Demand High
Indicates the analog input went above the configured analog input Diagnostic Maximum threshold.

Fault Name: AnalogDmdHighFault
Permissive: Analog demand configured for use
Failure Levels (4-20 mA range): user-configurable
Failure Levels (0-200 mA range): user-configurable
Persistence: 100 ms
Diagnostic Filtering: 100 of 300 samples, 1 ms sample rate
Fault Type: Alarm

Analog Demand Low
Indicates the analog input went below the configured analog input Diagnostic Minimum threshold.

Fault Name: AnalogDmdLowFault
Permissive: Analog demand configured for use
Failure Levels (4-20 mA range): user-configurable
Failure Levels (0-200 mA range): user-configurable
Persistence: 100 ms
Diagnostic Filtering: 100 of 300 samples, 1 ms sample rate
Fault Type: Alarm

PWM Demand High
Indicates the PWM input duty cycle went above the configured PWM Duty Cycle High Threshold.

Fault Name: PwmDmdHighFault
Permissive: PWM demand configured for use
Failure Levels: user-configurable
Persistence: 100 ms
Diagnostic Filtering: 100 of 300 samples, 1 ms sample rate
Fault Type: Alarm

PWM Demand Low
Indicates the PWM input duty cycle went below the configured PWM Duty Cycle Low Threshold.

Fault Name: PwmDmdLowFault
Permissive: PWM demand configured for use
Failure Levels: user-configurable
Persistence: 100 ms
Diagnostic Filtering: 100 of 300 samples, 1 ms sample rate
Fault Type: Alarm

CAN No Signal
This fault is set if the CAN demand is missing (no signal for 4 times the CAN No Signal Timeout setting) or is too slow (slower than the CAN No Signal Timeout setting for two consecutive messages). When active, the CAN position demand signal will remain at the last commanded value. A Loss of All Position Demands fault can be configured to shut down the actuator when all demand signals are failed.

Fault Name: CanNoSignalFault
Permissive: CAN demand configured for use
Persistence: signal reception > 100 ms, user-configurable
Fault Type: Alarm

CAN Bad Signal
Indicates the J1939 CAN demand value was received above 100% (> 0x9C40) for longer than 400 ms. The CAN position demand signal is internally limited to 100% when this fault is active. If this fault goes away and non-latching faults are configured, the unit will return to normal operation (positioning under CAN command).

Fault Name: CanBadSignalFault
Permissive: CAN demand configured for use
Persistence: 400 ms
Diagnostic Filtering: 400 of 1000 samples, 1 ms sample rate
Fault Type: Alarm

CAN Stop Commanded (Run/Stop)
Indicates a STOP command received over CAN, J1939 or CANopen. When a stop is commanded, the actuator will follow the shutdown action but not report a common shutdown.

Fault Name: CanRunStopIndication
Permissive: CAN demand configured for use
Fault Type: Status

CAN Bus Off Error
Indicates the CAN bus controller detects a bus off condition. CAN bus is disconnected, shorted, improperly terminated, the baud rate is incorrect, or if bit error rates are high enough to cause hardware failures. Typically caused by wiring problems on the CAN link, incorrect or missing termination resistors, or electrical problems within the controller or driver. The CAN position demand signal is forced to zero when this fault is active. If this fault goes away and non-latching faults are configured, CAN will return to normal operation.

Fault Name: CanBusOffFault
Persistence: 40 ms
Diagnostic Filtering: 40 of 100 samples, 1 ms sample rate
Fault Type: Ignore, Alarm, or Shutdown, user-configurable

J1939 Address Claim Error
This J1939 fault is set if the control's address cannot be claimed on the CAN bus. Typically a result of another unit on the bus with the same id with a higher priority. The CAN position demand signal is forced to zero when this fault is active.

Fault Name: J1939AddrClaimFault
Fault Type: Ignore, Alarm, or Shutdown, user-configurable

Stop Commanded (Run/Stop Discrete Input)
Indicates the run/stop discrete input is commanding a STOP. When a stop is commanded, the actuator will follow the shutdown action but not report a common shutdown.

Fault Name: RunStopIndication
Permissive: Run/Stop Discrete Input configured for use
Fault Type: Status

Electronics Temperature High
Indicates internal electronics temperature voltage is out of range high. The control will use a default temperature of 20 °C internally if this condition is detected. The value on the Service Tool will show the sensed values, not default.

Fault Name: ElecTempHighFault
Failure Levels: >140 °C
Persistence: 100 ms
Diagnostic Filtering: 10 of 30 samples, 10 ms sample rate
Fault Type: Alarm

Electronics Temperature Low
Indicates internal electronics temperature voltage is out of range low.

Fault Name: ElecTempLowFault
Failure Levels: < -45 °C
Persistence: 100 ms
Diagnostic Filtering: 10 of 30 samples, 10 ms sample rate
Fault Type: Alarm

This is an alarm condition that is always active. The control will use a default temperature of 20 °C internally if this condition is detected.

Torque Derating Active
This indicates the internally sensed temperature of the R-Series has exceeded the torque de-rating limit and the maximum drive current allowed has been decreased (see the temperature-based current limiting in Chapter 4).

Fault Name: TorqueDeratingFault
Failure Levels: > 118 °C (122 °C in software versions prior to 5418-7415)
Persistence: 2.5 sec on delay, 5 sec off delay
Diagnostic Filtering: 250 of 500 samples, 10 ms sample rate
Fault Type: Alarm

This is an alarm condition that is always active.

Zero Torque Fault
This indicates the internally sensed temperature of the R-Series has exceeded 125 °C and the actuator torque is reduced to zero (see current limiting). Between the torque de-rating limit and 125 °C, the actuator will function with reduced torque (current limited). The actuator returns to normal operation when the internal temperature falls below the torque de-rating limit.

Fault Name: ZeroTorqueFault
Failure Levels: > 125 °C
Persistence: 2.5 sec on delay, 5 sec off delay
Diagnostic Filtering: 250 of 500 samples, 10 ms sample rate
Fault Type: Shutdown (limp)

This is a hard-coded unlatched shutdown. The control will go limp if this condition is detected. Operation will resume when condition clears (< 125 °C for 5 seconds), using limited current until temperature drops below the torque de-rating limit.

⚠WARNING **Sudden Movement**	**The controller protects the internal electronics by going to limp mode "zero torque" when the internal temperature exceeds 125 °C. When this happens, the position of the output shaft is not controlled by the actuator. When the internal temperature of the R-Series returns to below 125 °C, there may be a sudden movement to the latest command position.**

Configuration Error (Internal Fault Alarm condition)
Indicates an error is detected in the device configuration. See Chapter 6 for details of configuration items checked and their meaning.

Fault Name: ConfigurationErrorFault
Fault Type: Alarm

Coil Current Error (Internal Fault Alarm condition)
An internal diagnostic check has detected a possible wire break in one of the internal actuator coil wires.

Fault Name: CoilCurrentErrorFault
Permissive: position error is detected
Failure Levels: commanded-to-actual current > 1A
Persistence: > 2.0 s
Fault Type: Alarm

Shaft Position Sensor Failed (Internal Fault Shutdown condition)
An internal diagnostic check has determined the actuator position sensor has failed.

Fault Name: ShaftSensorFault
Persistence: 50 ms
Diagnostic Filtering: 5 of 10 samples, 10 ms sample rate
Fault Type: Shutdown (limp)

This is a hard-coded latched shutdown. The control will go limp if this condition is detected. This fault always latches and requires a reset command to clear. A power cycle will not clear this fault.

Motor Position Sensor Failed (Internal Fault Shutdown condition)
An internal diagnostic check has determined the actuator position sensor has failed.

Fault Name: MotorSensorFault
Persistence: 50 ms
Diagnostic Filtering: 5 of 10 samples, 10 ms sample rate
Fault Type: Shutdown (limp)

This is a hard-coded latched shutdown. The control will go limp if this condition is detected. This fault always latches and requires a reset command to clear. A power cycle will not clear this fault.

Memory Fail (Internal Fault Shutdown condition)
Indicates that there is a problem with the data read from internal non-volatile memory (CRC failure or array size incorrect). This is also set when a new software version is loaded into the unit. This is a hard-coded latched shutdown. The control will go limp if this condition is detected. This fault always latches and requires a reset command to clear. A power cycle will not clear this fault.

Fault Name: NvMemoryFault
Fault Type: Shutdown (limp)

Sense 12 V fault (Internal Fault condition)
Indicates Sense 12 V fault, which is an internally monitored voltage. While this fault is present, the PWM (low-side mode only) input accuracy may be affected and the analog output may not be able to deliver full current. A persistent 12V Fault condition indicates an internal problem with the actuator that could lead to eventual loss of primary function. The actuator should be returned for service at the customer's earliest convenience. This fault always latches and requires a reset command to clear.

Fault Name: Sense12VFault
Failure Levels: > 12.6 V or < 11.4 V
Persistence: 3 s
Diagnostic Filtering: 300 of 600 samples, 10 ms sample rate
Fault Type: Ignore, Alarm, or Shutdown, user-configurable

This is a latched condition. This fault always latches and requires a reset command to clear. A power cycle will not clear this fault.

Position Sense Deviation (motor-to-shaft) (Internal Fault condition)
Indicates a deviation had been detected between the two internal position sensors (shaft and motor).

Fault Name: PosSenseDeviationFault
Failure Levels: difference > 5 deg
Persistence: 700 ms
Diagnostic Filtering: 700 of 1000 samples, 1 ms sample rate
Fault Type: Ignore, Alarm, or Shutdown, user-configurable

Discrete Out Diagnostic fault
Indicates a short circuit (overcurrent) in the discrete output drive. Indicates the monitored diagnostic voltage is below threshold. This fault is only detectable when the output is turned on.

Fault Name: DiscOutDiagFault
Permissive: low-side discrete output must be configured
Failure Levels: voltage < 3.5 V, cleared when > 4.5 V
Persistence: 100 ms continuous
Fault Type: Ignore or Alarm, user-configurable

This is always a non-latching diagnostic condition.

Position Dynamics

The R-Series does not have any controller settings adjustments, the dynamic parameters are pre-configured with no adjustment required.

End Stops Settings

The Service Tool is used to set and save the mechanical stops settings used by the actuator position control. See Chapter 6 for setting instructions.

The location of mechanical stops must be saved in the R-Series to properly scale actuator travel (0% to 100%) between these stops. If not saved, the control will revert to the previous settings upon loss of power. An Auto Find Mechanical Stops feature is provided to simplify locating the stop positions at min and max travel. The range of travel can then be manually adjusted by modifying the span and min position offset values. The automatic method for finding the mechanical stops is preferred and recommended. However, the min position offset may need to be adjusted if sticking of the end device (e.g., butterfly valve) is experienced at the min position.

The control settings for a specific engine system can be used for other duplicate engine builds provided adequate measures are employed to assure the linkage and stop settings are equal to the original engine settings.

NOTICE	**Do not install any external mechanical stops inside the actuator's range of travel without properly modifying the actuator travel settings. This could cause damage to the actuator's gearing or to the end device because the impact velocity is not adjusted inside the actuator's hard stops.**

CAN Communications

The R-Series supports either CANopen or J1939 communications on CAN port 1. Bit timing is 250 kbps by default, but configurable as 250 k, 500 k, and 1 M bits/s. If desired, CAN communications can be turned off completely. A diagnostic fault is provided to annunciate a Bus Off condition.

The use of a CAN position command is optional, allowing the user to just use CAN for monitoring purposes. The CAN demand input is monitored and diagnostic faults are provided when the input is out of range or sent too slowly.

Harness coding is provided to facilitate multiple R-Series units on a common bus. The CAN ID Low and High discrete inputs select the R-Series Unit number (1-4) in power up. For details, see CAN ID inputs in Chapter 3.

CANopen Communications

R-Series models with 5418-7415 software support CAN communications in the CIA CANopen Protocol format complying with DS301 version 4.2. CANopen is at a prototype maturity level in 5418-7091 and is not supported in 5418-6896. Further detailed information regarding CANopen can be obtained at **www.can-cia.org**. Information about CAN is available in ISO 11898. Specific information regarding R-Series behavior is detailed below.

The CANopen Electronic Data Sheet (EDS) can be downloaded from **www.woodward.com/software**.

Features

NMT: NMT Slave
Error Control: Heartbeat Producer
Bit Rates: software configured as 250, 500, or 1000 kbps.

Node ID: four pre-set values for CAN ID selected number 1 through 4; each is software configured between 1 and 127.

Heartbeat Production Rate: Software configured between 0 and 10000 ms. When set to ‘0’, the heartbeat is turned off. This rate can also be set using Object 0x1017.

RPDO (quantity): 1
TPDO (quantity): 2
PDO modes: Asynchronous (periodic), Remotely Requested
Emergency Producer: Yes
Emergency Consumer: No
Sync Producer: No
Sync Counter: No
Timestamp: No

R-Series PDO Support

The R-Series utilizes 2 TPDO transmit (Valve data and Prognostics data messages) and 1 RPDO receive (Valve position demand), using the standard connection set to assign PDO numbers. The Node ID determines the COB ID for the PDOs.

LSS Support

The R-Series supports the following LSS slave services per CiA 305 DSP version 3.0.0:

- Switch state global
- Switch state selective
- Configure node-ID
- Store configuration
- Inquire LSS address
- Inquire node-ID
- LSS identify remote slave
- LSS identify slave
- LSS identify remote non-configured slave
- LSS identify non-configured slave

Summary of Supported Objects

A summary of the supported objects is listed below with details are provided in the CANopen Objects section.

Mandatory Objects

1=0x1000 Device Type
2=0x1001 Error Register
3=0x1018 Identity Object

Additional Objects

1=0x1008 Manufacturer device name
2=0x1009 Manufacturer device name
3=0x100A Manufacturer software version
4=0x1010 Store Parameters
5=0x1014 COB-ID EMCY
6=0x1017 Producer heartbeat time
7=0x1200 Server SDO parameter
8=0x1400 Receive PDO parameter
9=0x1600 Receive PDO mapping
10=0x1800 Transmit PDO parameter
11=0x1801 Transmit PDO parameter
12=0x1A00 Transmit PDO mapping
13=0x1A01 Transmit PDO mapping

Manufacturer Objects

1=0x2278
2=0x2279
3=0x227A
4=0x227B
5=0x227C
6=0x227D
7=0x227E
8=0x227F
9=0x2280
10=0x2281
11=0x2282
12=0x2283
13=0x2284
14=0x2285
15=0x2286
16=0x2287
17=0x2288
18=0x2289
19=0x228A
20=0x228B
21=0x228C
22=0x228D
23=0x228E
24=0x228F
25=0x2290
26=0x2291
27=0x2292
28=0x2293

J1939 Communications

The R-Series provides a flexible method to customize how information is sent and received via J1939. Each data parameter (SPN – Suspect Parameter Number) may be assigned to a PGN (Parameter Group Number) and its location within the PGN may be defined using the Service Tool. There is possibility to define initial Source Address. The J1939 NAME used to acquire a Source Address may also be defined. Legacy modes are provided as well so that backward compatibility to ProAct or P-Series models is provided if needed. All of this customization may be done uniquely for each of the four harness ID selections.

Flexible Messaging Definition

Flexible messaging allows the user to customize the content of messages to be sent and received by the R-Series on the J1939 network. This feature allows the user to implement most of the standard actuator and valve types already defined in J1939-71 or to create custom proprietary messages.

The following commands can be optionally received:

- Position Command
- Run/Stop
- Diagnostic Clearing (DM11)
- Previously Active Diagnostic Clearing (DM3) (not supported in 5418-7091 or 5418-6986)

The following data can be optionally transmitted:

- Diagnostic status reporting (DM1, DM2, and/or proprietary bit field)
- Actual Position
- Desired Position
- Electronic Temperature
- Operation Status
- Control Mode
- Preliminary FMI and Temperature Status

Additionally, the following data can be requested:

- ECU Identification

- Software Identification

J1939 Diagnostics Summary

Table 4-1 helps correlate each warning and error condition with the multiple J1939 reporting methods.

See Tables 5-2, 5-3, and 5-4 for definitions of Prelim FMI, Operation Status, and Temperature Status. Diagnostic conditions details are provided in the Faults section.

Table 4-1. J1939 Diagnostic Reporting

Diagnostic Condition	Diagnostic Bit Field	Data Indications	Prelim FMI	Operation Status (When Diag is configured as an Alarm)	Operation Status (When Diag is configured as SD)	Temp Status
Low Supply Voltage Fault	1.3	Data not reported in an SPN	4	DERATE	CONTROLLED SD	Not affected
Internal Fault Trip	1.1	Data not reported in an SPN	12	(n/a)	CONTROLLED SD	Not affected
High Supply Voltage Fault	1.3	Data not reported in an SPN	3	ALARM	CONTROLLED SD	Not affected
Run / Stop Shutdown	3.1	Data not reported in an SPN	5	UN-CONTROLLED SD	UN-CONTROLLED SD	Not affected
Zero Torque	2.7	Temp value >= 125 °C	0	CONTROLLED SD	CONTROLLED SD	HIGH MOST SEVERE
Loss of Position Demand (all)	3.5	Desired Position set to 0xFE	14	ALARM HIGH SEVERITY	CONTROLLED SD	Not affected
Analog Demand Failed High	3.7	Desired Position shows value in use	15	ALARM	ALARM	Not affected
Analog Demand Failed Low	3.7	Desired Position shows value in use	17	ALARM	ALARM	Not affected

Table 4-1. J1939 Diagnostic Reporting (continued)

Diagnostic Condition	Diagnostic Bit Field	Data Indications	Prelim FMI	Operation Status (When Diag is configured as an Alarm)	Operation Status (When Diag is configured as SD)	Temp Status
PWM Duty Cycle Failed	4.1	Desired Position shows value in use	8	ALARM	ALARM	Not affected
CAN Demand Failed - No Signal	4.3	Desired Position shows value in use	9	ALARM	ALARM	Not affected
Electronics Temp High (Derating)	2.5	Temp value >= 118 °C (122 °C in software versions prior to 5418-7415)	15	DERATE	CONTROLLED SD	HIGH LEAST SEVERE
Position Error	1.7	Position feedback shows position	7	ALARM HIGH SEVERITY	CONTROLLED SD	Not affected
Demand Tracking Error	3.3	Data not reported in an SPN	2	ALARM	ALARM	Not affected
Temperature Sensor Failed	2.3	Temp data set to 0xFE	None	DERATE	DERATE state	ERROR state
CAN Demand Out of Range	4.3	Desired Position shows one in use	16	ALARM	ALARM	Not affected
Discrete Out Diagnostic	4.5	None	6	ALARM	ALARM	Not affected
Internal Fault Alarm	2.1	None	13	ALARM	ALARM	Not affected
Normal	None	Normal	31	NORMAL	NORMAL state	IN RANGE state
Address Claim Error	None	None	None	Can't Transmit	Can't Transmit	Can't Transmit

Chapter 5.
CAN

The R-Series supports either J1939 or CANopen communications on CAN port 1. If desired, CAN communications can be turned off completely. A diagnostic fault is provided to annunciate a Bus Off condition.

The use of a CAN position command is optional, allowing the user to just use CAN for monitoring purposes. The CAN demand input is monitored, and diagnostic faults are provided when the input is out of range or sent too slowly.

Harness coding is provided to facilitate multiple R-Series units on a common bus. The CAN ID Low and High discrete inputs select the R-Series Unit number (1-4) on power up. For details, see CAN ID inputs in Chapter 3.

CANopen Communications

R-Series models with 5418-7415 software support CAN communications in the CIA CANopen Protocol format complying with DS301 version 4.2. CANopen is at prototype maturity level in 5418-7091 and is not supported in 5418-6986. Further detailed information regarding CANopen can be obtained at **www.can-cia.org**. Information about CAN is available in ISO 11898. Specific information regarding R-Series behavior is detailed below.

The CANopen Electronic Data Sheet (EDS) can be downloaded from **www.woodward.com/software**.

Node ID
Uses four pre-set values for CAN ID selected number 1 through 4; each is software configured between 1 and 127.

Heartbeat Production Rate
Software configured and/or set using the Heartbeat Producer object (0x1017). When set to ‘0’, the heartbeat message is turned off.

R-Series PDO Support
The R-Series utilizes 2 TPDO transmit (Valve data and Prognostics data messages) and 1 RPDO receive (Valve position demand), using the standard connection set to assign PDO numbers. The Node ID determines the COB ID for the PDOs.

Received Messages
The R-Series utilizes one CAN RPDO to receive a position command, summarized in the following table. Details on each manufacturer-specific object are provided in the CANopen Objects section.

RPDO1 (Rx)

Maximum Reception rate:	5 ms (Engine Control to R-Series)
Message type:	“ASYNC” (does not require SYNC message)
Timeout:	Configurable from 10 to 10,000 ms
COB Id:	512+NodeId (0x200+NodeId)
Data length:	2 bytes

Byte	Parameter	Object	Representation
1 -2	Valve Position Command	2278	%/100 (0.01%/bit)

Transmitted Messages

The R-Series utilizes one CAN Tx PDO summarized in the following table. Details on each manufacturer-specific object are provided in the CANopen Objects section.

TPDO1 (Tx)

The following message is continuously transmitted by the R-Series when in the CANopen Operational mode. Object mapping is fixed. This message can be turned off and has a variable transmission rate.

Transmission rate: Configurable from 0 to 30,000 ms. Can be set using 0x1800sub5.
Message type: "ASYNC" (does not require SYNC message)
COB Id: 384+NodeId (0x180+NodeId)
Data length: 7 bytes

TPDO1 (Tx) Valve Data

Byte	Parameter	Object	Representation
1-2	Actual Position	2279	%/100 (0.01%/bit)
3-4	Desired Position	227A	%/100 (0.01%/bit)
5-6	Active Diagnostics Array	227E	Bit field
7	Status Data Bits 1-4 Controller Operation Status Bits 5-7 Demand State Bit 8 Discrete Output active status	2280	Bit field

TPDO2 (Tx)

The following message is continuously transmitted by the R-Series when in the CANopen Operational mode. Object mapping is fixed. This message can be turned off and has a variable transmission rate.

Transmission rate: Configurable from 0 to 30,000 ms (0=off) Can be set using 0x1801sub5
Message type: "ASYNC" (does not require SYNC message)
COB Id: 640+NodeId (0x280+NodeId)
Data length: 8 bytes

TPDO2 (Tx) Prognostics Data

Byte	Parameter	Object	Representation
1 -2	Transmission Error	2286	0.1deg/bit
3-4	Demanded Current	2281	0.001A/bit
5-6	Sensed Current	2282	0.001A/bit
7	Torque Margin	2285	1%/bit
8	Position Feedback	2287	1%/bit

EMCY (Tx)
The EMCY message is transmitted whenever the data in the diagnostic bit field (object 0x227E) changes. The diagnostic bit field appears in the manufacturer-specific error field. When one of the diagnostic bits is set, the message is sent with error code 1000_h (generic error). When one of the diagnostic bits clears, the message is sent with error code 0000_h (error reset).

Transmission rate: on change of diagnostic bit field, with a minimum time of 10 ms between messages.
COB Id: 128+NodeId (0x80+NodeId)
Data length: 8 bytes

Byte	Description
1-2	Emergency Error Code (0000 or 0001)
3	Error Register (object 0x1001)
4-5	Diagnostic array (object 0x227E)
6-8	Set to zero

Layer Setting Services (LSS) Support
LSS services allow a CANopen module with LSS Master capabilities to inquire or change certain local layer settings on the R-Series via the CAN bus. The following LSS slave services are provided per CiA 305 DSP version 3.0.0:

- Switch state global
- Switch state selective
- Configure node-ID
- Store configuration
- Inquire LSS address
- Inquire node-ID
- LSS identify remote slave
- LSS identify slave
- LSS identify remote non-configured slave
- LSS identify non-configured slave

The following slave services are not supported:

- Activate bit timing parameters
- Configure bit timing parameters
- Fastscan service for LSS slave identification

Please note that in the R-Series, use of the LSS Store configuration service causes all parameters to be saved, not just the CANopen local layer settings. This is an exception to the standard in that the LSS Store configuration service normally saves only the local layer settings.

Object Dictionary

The following table provides a summary of the available objects. These are internal data objects (IDOs) accessible by SDO services. Additional details on each object can be found in the CANopen Objects section later in this document.

Manufacturer Objects

Table 5-1. Manufacturer Internal Data Objects

Parameter	Object	Access	Type	Units	Scaling
Valve Position Command	2278	WO	U16	%*100	0.01%/bit
Actual Valve Position	2279	RO	S16	%*100	0.01%/bit
Desired Valve Position	227A	RO	S16	%*100	0.01%/bit
Position Commands (Analog, PWM, CAN)	227B (3)	RO	S16	%*100	0.01%/bit
Electronics Temperature	227C	RO	S16	degC	1deg/bit
Input Voltage	227D	RO	U16	V*100	0.01V/bit
Active Diagnostics	227E	RO	U16	none	Bit field
Previously Active Diagnostics	227F	RO	U16	none	Bit field
Status Data	2280	RO	U8	none	
Demanded current	2281	RO	S16	A*1000	0.001A/bit
Sensed current	2282	RO	S16	A*1000	0.001A/bit
Peak positive current	2283	RO	U8	A*10	0.1A/bit
Peak negative current	2284	RO	U8	A*10	0.1A/bit
Torque Margin	2285	RO	U8	Percent	1%/bit
Transmission Error	2286	RO	S16	deg*10	0.1deg/bit
Position Feedback	2287	RO	S8	Percent	1%/bit
Clear Diagnostics	2288	WO	U8	none	Bit field
Command Bits (Run/Stop)	2289	RW	U8	none	Bit field
Shutdown Settings	228A (3)	RW	U8	Percent seconds	1%/bit 1 sec/bit
On Stops	228B (8)	RW (1-7), RO (8)	various	A*1000 %*1000 S*1000	0.001A/bit 0.001%/bit 0.001 sec/bit
Position Error Settings (max, delay)	228C (2)	RW	U8	%*10 Sec*10	0.1%/bit 0.1sec/bit
Position Demand Source Settings	228D (2)	RW	U8	none	
Travel Settings	228E (2)	RW	U16	deg*10	0.1deg/bit
Auto Stroke	228F (4)	various	various	None	none
Self test Execution	2290 (6)	various	various	None	none
Self test Settings	2291 (6)	RW	S16	*1000	0.001x/bit
Self test Results	2292 (8)	RO	S16	*1000	0.001x/bit
Time (run time, operating time)	2293 (2)	RO	U32	sec	1sec/bit

CANopen Standard Objects Supported

Table 5-2. CANopen Standard Objects

Parameter	Object	Access	Type
NMT	0		
EMCY	80+NID		
Device Type	1000	RO	U32
Error Register	1001	RO	U8
Mfr Device Name	1008	RW	STRING
Mfr Hardware Version	1009	RO	STRING
Mfr Software Version	100A	RO	STRING
Store Parameters Save All (1)	1010 (1)	RO	U32
COB_ID EMCY	1014	RO	U32
Producer Heartbeat (ms)	1017	RW	U16
Identity Vendor ID (1) Product Code (2) Rev (3) S/N (4)	1018 (4)	RO	U32

CANopen Objects

The following section provides additional details on the CANopen objects supported by the R-Series, manufacturer specific objects. The product EDS file (Woodward part number 9927-2402) is available for download on the Woodward website (**www.woodward.com**).

Object 1000 – Device Type

Requests of the device type always returns a 0, indicating the R-Series does not follow a standardized device profile. Access: read-only.

Object 1001 – Error Register

Error register, part of the Emergency object. Generic error (bit 0) supported. Access: read-only.

Object 1008 – Manufacturer device name

Null-terminated string indication of the device name (‘Rseries’). Can be modified by the user so that multiple, otherwise identical units on an engine have unique names. Access: read-write.

Object 1009 – Manufacturer hardware version

Null-terminated string indication of the hardware version. Set to the upper-level assembly part number and revision. Access: read-only (constant).

Object 100A – Manufacturer software version

Null-terminated string indication of the software version. Set to SID name, which is the Application Id shown in the Service Tool. Example: _54187091_NEW. Access: read-only (constant).

Object 1010 – Store Parameters

This object supports saving of parameters in non-volatile memory. To prevent inadvertent storage, a signature string of ‘save’ must be written to execute this function.
Provides the following sub-indexes:
> SubIndex 0: Largest Sub-index supported (1). Access: read-only (constant).
> SubIndex 1: Save all parameters. Access: read-write.

Object 1014 – COB-ID EMCY
Indicates the configured COB-ID for the EMCY write service. Access: read-only.

Object 1017 – Producer Heartbeat Time
Requests of the producer heartbeat time return the value set by the user-configured Producer Heartbeat Time. COB-ID: 700h + NodeId. Access: read-write.

Object 1018 – Identity Object
Provides the following sub-indexes:
> SubIndex 0: Number of Entries (always = 4) Access: read-only.
> SubIndex 1: Vendor Id (0x0170 for Woodward) Access: read-only.
> SubIndex 2: Product Code (Woodward upper-level assembly part number, 8410-1234 is represented as 84101234) Access: read-only.
> SubIndex 3: Product Revision Number Access: read-only.
Major/Minor Revision level of the device, per the CANopen standard. For 5418-7415 rev - software, the revision number is 0x00010001 (major rev = 1, minor rev = 1). For 5418-7415 A software, it is 0x00010002. Access: read-only.
> SubIndex 4: Product Serial Number (Woodward upper-level assembly serial number). Access: read-only.

Object 1200 – Server SDO parameter
Provides the following sub-indexes:
> SubIndex 0: Number of supported entries. Access: read-only.
> SubIndex 1: COB-ID Client -> Server (rx) NODEID+0x600. Access: read-only (constant).
> SubIndex 2: COB-ID Server -> Client (tx) NODEID+0x580. Access: read-only.

Object 1400 – Receive PDO parameter
The RxPDO 1 parameter provides the following sub-indexes:
> SubIndex 0: number of elements (2). Access: read-only.
> SubIndex 1: Cob Id used by PDO (NODEID+0x200). Access: read-only.
> SubIndex 2: Transmission Type (0xFE). Access: read-only.

Object 1600 – Receive PDO mapping
Provides the following sub-indexes:
> SubIndex 0: Number of supported entries. Access: read-only.
> SubIndex 1: Desired Position Setpoint (0x22780010). Access: read-only (constant).

Object 1800 – Transmit PDO parameter
The TxPDO 1 parameter provides the following sub-indexes:
> SubIndex 0: Largest Sub-index supported (2). Access: read-only (constant).
> SubIndex 1: COB-ID used by PDO (180h + NodeId). Access: read-only.
> SubIndex 2: Transmission Type (FEh). Access: read-only.
> SubIndex 5: Event Timer (time interval for TPDO transmit). Access: read-write.

Object 1801 – Transmit PDO parameter
The TxPDO 2 parameter provides the following sub-indexes:
> SubIndex 0: Largest Sub-index supported (2). Access: read-only.
> SubIndex 1: COB-ID used by PDO (280h + NodeId). Access: read-only.
> SubIndex 2: Transmission Type (FEh). Access: read-only.
> SubIndex 5: Event Timer (time interval for TPDO transmit). Access: read-write.

Object 1A00 – Transmit PDO mapping
Provides the following sub-indexes:
> SubIndex 0: Number of supported entries. Access: read-only.
> SubIndex 1: Actual Valve Position (0x2279). Access: read-only (constant).
> SubIndex 2: Desired Valve Position (0x227A). Access: read-only (constant).
> SubIndex 3: Active Diagnostics Array (0x227E). Access: read-only (constant).
> SubIndex 4: Status Data (0x2280). Access: read-only (constant).

Object 1A01 – Transmit PDO mapping

Provides the following sub-indexes:
> SubIndex 0: Number of supported entries. Access: read-only.
> SubIndex 1: Transmission Error (0x2286). Access: read-only (constant).
> SubIndex 2: Demanded Current (0x2281). Access: read-only (constant).
> SubIndex 3: Sensed Current (0x2282). Access: read-only (constant).
> SubIndex 4: Torque Margin (0x2285). Access: read-only (constant).
> SubIndex 5: Position Feedback (0x2287). Access: read-only (constant).

Object 2278 –Valve Position Command

Desired valve position setpoint command to the R-Series, in percentage of user-calibrated overall travel. To accept this command, a Demand Source must be set to CAN. The minimum receive rate, prior to an annunciated fault, is determined by the configured CAN Fault Timeout setting.

Mapping: RPDO1, bytes 1-2
Access: Write-only
Data Type: unsigned 16-bit
Units: % * 100
Scaling: 0.01%/bit, 0-100% is 0-0x2710. Values limited between 0 and 100%.

Object 2279 – Actual Valve Position

Actual valve position indication, in percentage of user-calibrated overall travel.

Mapping: TPDO1, bytes 1-2
Access: Read-only
Data Type: signed 16-bit
Units: % * 100
Scaling: 0.01%/bit, 0-100% is 0-0x2710

Object 227A – Desired Valve Position

Desired valve position setpoint indication, in percentage of user-calibrated overall travel.

Mapping: TPDO1, bytes 3-4
Access: Read-only
Data Type: signed 16-bit
Scaling: 0.01%/bit, 0-100% is 0-0x2710.

Object 227B –Position Command

Desired valve position setpoint command set by the individual inputs, in percentage of user-calibrated overall travel.
> SubIndex 0: Number of supported entries. Access: read-only (constant).

> SubIndex 1: **Analog Position Command**.
Valve position setpoint command set by the analog input.

Access: read-only (constant).
Mapping: not mapped
Access: Read-only
Data Type: signed 16-bit
Units: % * 100
Scaling: 0.01%/bit, 0-100% is 0-0x2710

> SubIndex 2: **PWM Position Command**.
Valve position setpoint command set by the PWM input.

Access: read-only (constant).
Mapping: not mapped
Access: Read-only
Data Type: signed 16-bit
Units: % * 100
Scaling: 0.01%/bit, 0-100% is 0-0x2710

> SubIndex 3: **CAN Position Command**.
Valve position setpoint command set by the CAN input.

Access: read-only (constant).
Mapping: not mapped
Access: Read-only
Data Type: signed 16-bit
Units: % * 100
Scaling: 0.01%/bit, 0-100% is 0-0x2710

Object 227C – Electronics Temperature

Electronics temperature indication, in °C.

Mapping: not mapped
Access: Read-only
Data Type: signed 16-bit
Units: degC
Scaling: 1 degC/bit

Object 227D –Input Voltage

Controller input voltage indication, in volts.

Mapping: not mapped
Access: Read-only
Data Type: unsigned 16-bit
Units: V * 100
Scaling: 0.01 V/bit

Object 227E – Active Diagnostics Array

Provides an indication of currently active faults within the R-Series.

Mapping: TPDO1 (Tx), byte 5-6
Access: Read-only
Data Type: bit field (unsigned 16-bit)

<u>Bit Representation (1=active, 0=inactive)</u>

Bit 1: Internal Fault Shutdown
Bit 2: Stop commanded (Run/Stop)
Bit 3: Input (Supply) Voltage Fault
Bit 4: Position (following) Error
Bit 5: Temperature Sensor Fault (internal, using default)
Bit 6: Torque Derating Active (high temperature)
Bit 7: Zero Torque Indication (high temperature)
Bit 8: External Fault Detected
Bit 9: Internal Fault Alarm
Bit 10: Loss of All Position Demands
Bit 11: Demand Tracking Error
Bit 12: Analog Position Demand Failed
Bit 13: PWM Position Demand Failed
Bit 14: CAN Position Demand Failed
Bit 15: CAN Fault
Bit 16: CAN Stop Command

Object 227F – Previously Active Diagnostics Array

Provides an indication of previously active faults within the R-Series.

Mapping: not mapped
Access: Read-only
Data Type: bit field (unsigned 16-bit)

Bit Representation (1=active, 0=inactive)

Bit 1: Internal Fault Shutdown
Bit 2: Stop commanded (Run/Stop)
Bit 3: Input (Supply) Voltage Fault
Bit 4: Position (following) Error
Bit 5: Temperature Sensor Fault (internal, using default)
Bit 6: Torque Derating Active (high temperature)
Bit 7: Zero Torque Indication (high temperature)
Bit 8: External Fault Detected
Bit 9: Internal Fault Alarm
Bit 10: Loss of All Position Demands
Bit 11: Demand Tracking Error
Bit 12: Analog Position Demand Failed
Bit 13: PWM Position Demand Failed
Bit 14: CAN Position Demand Failed
Bit 15: CAN Fault
Bit 16: CAN Stop Command

Object 2280 - Status Data

These bits provide R-Series status indications including the controller's operating status (alarm/shutdown/derated), the demand redundancy state, and the discrete output status.

Mapping: TPDO1 (Tx), byte 7
Access: Read-only
Data Type: unsigned 8-bit

Bit definition:

Bits 1-4: Controller Operation Status (size 4 bits, *defined below*)
Bits 5-7: Demand State (size 3 bits, *defined below*)
Bit 8: Discrete Output Status (size 1 bit)

Controller Operation Status

These 4 bits provide an indication of the controller's operating status, defined in the table below. When multiple conditions exist, the highest active severity is indicated (0001 is lowest and 0101 is highest).

Table 5-3. Controller Operation Status

Hex Value	Bits	Indication
0	0000	Normal
1	0001	Alarm (fully operational but needs service)
2	0010	Alarm High Severity (functional but transient performance may be reduced)
3	0011	Derate Active (torque output reduced due to environmental conditions)
4	0100	Controlled Shutdown Active (driving to the shutdown position)
5	0101	Uncontrolled Shutdown Active (actuator current is off so it is limp)
6-D	0110-1101	Reserved for future assignment
E	1110	Error
F	1111	Not Available

Demand State

Provides information on the state status of the demand redundancy controller. Applicable primarily when redundant demand inputs are configured. The data is represented using 3 bits and defined by the table below.

Table 5-4. Demand State Status

Value	Bits	Demand Operating State
0	000	Primary Demand In Control
1	001	Primary Demand In Control (Backup Fault)
2	010	Backup Demand In Control (Primary Fault)
3	011	All Demand Signals Failed
4	100	Primary Demand enabled but not active (delay from Backup Control)
5	101	Reserved for future assignment
6	110	Error
7	111	Not Available

Discrete Output Active Status

This status is a single bit of data providing an indication of the commanded state of the discrete output (1=ON, 0=OFF). The conditions that set this output are configurable allowing a customizable CAN indication when the discrete output is not used.

Object 2281 – Demanded Current

Data is the value of the demanded current.

Mapping: TPDO2 (Tx), byte 3-4
Access: Read-only
Data Type: signed 16-bit
Units: mA
Scaling: 1mA/bit

Object 2282 – Sensed Current

Data is the value of the sensed current.

Mapping: TPDO2 (Tx), byte 5-6
Access: Read-only
Data Type: signed 16-bit
Units: mA
Scaling: 1mA/bit

Object 2283 – Peak Positive Current

Data will indicate the maximum positive estimated current during the last 1 second interval.

Mapping: not mapped
Access: Read-only
Data Type: unsigned 8-bit
Units: A * 10
Scaling: 0.1A/bit

Object 2284 – Peak Negative Current

Data will indicate the absolute value or the maximum negative estimated current during the last 1 second interval.

Mapping: not mapped
Access: Read-only
Data Type: unsigned 8-bit
Units: A * 10
Scaling: 0.1A/bit

Object 2285 – Torque Margin

Data will indicate the torque margin at the time of the transmitted message. A 75% margin will be indicated when using 25% of the available (steady-state) current.

Mapping: TPDO2 (Tx), byte 7
Access: Read-only
Data Type: unsigned 8-bit
Units: %
Scaling: 1%/bit

Object 2286 – Transmission Error

Data will indicate the transmission error which is the difference between the sensed shaft position and the sensed motor position. Units are in degrees rotation (angle).

Mapping: TPDO2 (Tx), byte 1-2
Access: Read-only
Data Type: signed 16-bit
Units: degrees * 10
Scaling: 0.1 deg/bit

Object 2287 – Position Feedback

Data will indicate the shaft position.

Mapping: TPDO2 (Tx), byte 8
Access: Read-only
Data Type: signed 8-bit
Units: %
Scaling: 1%/bit

Object 2288 – Clear Diagnostics Command

Permits commands to Clear active and previously diagnostics (see Objects 227E & 227F). A command to Clear (Active) Diagnostics is only meaningful when Enable Fault Latching is configured, otherwise faults automatically clear. The ability to clear diagnostics is also provided on the Service Tool. This function requires a data value change, so after a clear is commanded it is recommended to set the data back to ‘0’.

Mapping: not mapped
Access: Write-only
Data Type: unsigned 8-bit

Bit definition:

Bits 1-2: Clear Diagnostics Command
- 00 No action
- 01 Clear diagnostics
- 10 Reserved, no action
- 11 Not supported, no action

Bits 3-4: Clear Previously Active Diagnostics Command
- 00 No action
- 01 Clear previously active diagnostics
- 10 Reserved, no action
- 11 Not supported, no action

Bits 5-8: (spare)

Object 2289 – Command Bits

Provides Run/Stop (Run Enable) command functionality. For the run/stop STOP command, action shall only be taken upon transition from '0' to '1'.

Mapping: not mapped
Access: Write-only
Data Type: unsigned 8-bit

Bit definition:
Bits 1-2: Run/Stop Command
Bits 3-8: (spare)

Value	Run/Stop Command Function
0	Reset Stop (Run)
1	Stop
2-7	Reserved, no action

Object 228A – Shutdown Settings

Settings relating to the action taken when a shutdown diagnostic condition is detected.

> SubIndex 0: **Number of Objects**. Access: read-only (constant).

> SubIndex 1: **Shutdown Mode**.
Sets the action performed when a shutdown condition is detected.
Mapping: not mapped
Access: Read-Write
Data Type: unsigned 8-bit *(see enumeration below)*
Limits: 0-2

Integer Representation
0=SD Limp
1=SD to Position
2=SD Position then Limp

> SubIndex 2: **Shutdown Position**.
Sets the internal position setpoint used when a shutdown diagnostic is detected and the mode is set to ‘SD Position’ or ‘SD Position then Limp’.
Mapping: not mapped
Access: Read-Write
Data Type: unsigned 8-bit
Units: %
Scaling: 1%/bit
Limits: 0-100%

> SubIndex 3: **Shutdown Limp Delay**.
The delay time before going limp when mode is set to ‘SD Position then Limp’, when a shutdown diagnostic is detected.
Mapping: not mapped
Access: Read-Write
Data Type: unsigned 8-bit
Units: sec
Scaling: 1sec/bit
Limits: 0-100 sec

Object 228B – On-Stops Mode Settings

Settings relating to the action taken when a shutdown diagnostic condition is detected. The controller shall optionally switch to current mode when holding a position at the stops, to eliminate chattering on the mechanical stops. This occurs after a configurable delay of continuously meeting the following criteria:

1.) Position demand within configurable tolerance of min or max (demand tolerance)
2.) Position feedback within configurable tolerance of min or max (feedback tolerance)

> SubIndex 0: **Number of Objects**. Access: read-only (constant).

> SubIndex 1: **Min Stop Enable**.
Turns on or off the on-stops mode function at actuator stop min position.

Mapping: not mapped
Access: Read-Write
Data Type: Boolean
Scaling: 0=disabled/off, 1=enabled/on
Limits: 0-1

> SubIndex 2: **Max Stop Enable**.
Turns on or off the on-stops mode function at actuator stop max position.

Mapping: not mapped
Access: Read-Write
Data Type: Boolean
Scaling: 0=disabled/off, 1=enabled/on
Limits: 0-1

> SubIndex 3: **Min Stop Hold Current**.
Sets the holding current when the actuator is near the min mechanical stop. Setting must also account for (include) spring load, if applicable.

Mapping: not mapped
Access: Read-Write
Data Type: unsigned 16-bit
Units: mA
Scaling: 1mA/bit
Limits: 0-8000 mA

> SubIndex 4: **Max Stop Hold Current**.
Sets the holding current when the actuator is near the max mechanical stop. Setting must also account for (include) spring load, if applicable.

Mapping: not mapped
Access: Read-Write
Data Type: unsigned 16-bit
Units: mA
Scaling: 1mA/bit
Limits: 0-8000 mA

> SubIndex 5: **On-Stop Demand Tolerance**.
Sets the tolerance for the position demand (how close to 0% or 100%) to determine if the holding current should be applied.

Mapping: not mapped
Access: Read-Write
Data Type: unsigned 16-bit
Units: % * 1000
Scaling: 0.001%/bit
Limits: 0-10%

> SubIndex 6: **On-Stop Feedback Tolerance**.
Sets the tolerance for the actual position (how close to the expected stops, 0% or 100%) to determine if the holding current should be applied. Setting should account for positional measurement/detection inaccuracies (e.g. temperature drift).

Mapping: not mapped
Access: Read-Write
Data Type: unsigned 16-bit
Units: % * 1000
Scaling: 0.001%/bit
Limits: 0-10%

> SubIndex 7: **On-Stop Delay Time**.
Sets the time duration that must be met before switching to current mode.

Mapping: not mapped
Access: Read-Write
Data Type: unsigned 16-bit
Units: msec
Scaling: 1ms/bit
Limits: 0-5000 ms

> SubIndex 8: **On-Stop Mode Active**.
Indicates when the on-stops mode is active and holding the current at the defined hold current value.

Mapping: not mapped
Access: Read-Only
Data Type: Boolean
Scaling: 0=not active, 1=active

Object 228C – Position Error Settings

Settings relating to the detection of a position error. The positon error indicates a deviation is detected between the commanded position and actual position.

> SubIndex 0: **Number Of Objects**. Access: read-only (constant).

> SubIndex 1: **Position Error Threshold**.
Sets the difference, in percentage, which triggers a diagnostic indication.

Mapping: not mapped
Access: Read-Write
Data Type: unsigned 8-bit
Units: % * 10
Scaling: 0.1%/bit
Limits: 0-10%

> SubIndex 2: **Position Error Delay**.
Sets the position error diagnostic delay time, in seconds, before triggering a diagnostic indication.

Mapping: not mapped
Access: Read-Write
Data Type: unsigned 8-bit
Units: sec * 10
Scaling: 0.1sec/bit
Limits: 0-10 sec

Object 228D – Position Demand Settings

Position demand settings, primary and backup selection.

> SubIndex 0: **Number Of Objects**. Access: read-only (constant).

> SubIndex 1: **Position Demand Source – Primary**.
Primary position demand selection.

Mapping: not mapped
Access: Read-Write
Data Type: unsigned 8-bit
Limits: 0-3

Integer Representation
0=Test Mode selected (unconfigured)
1=Analog command
2=PWM command
3=CAN command

> SubIndex 2: **Position Demand Source – Backup.**
Backup position demand selection.

Mapping: not mapped
Access: Read-Write
Data Type: unsigned 8-bit
Limits: 0-3

Integer Representation
0=Backup not used
1=Analog command
2=PWM command
3=CAN command

Object 228E – Travel Settings

Actuator travel settings.

> SubIndex 0: **Number Of Objects**. Access: read-only (constant).

> SubIndex 1: **Travel – Min Position (deg)**
Sets the actuator min position offset, in degrees from the min stop.

Mapping: not mapped
Access: Read-Write
Data Type: unsigned 16-bit
Units: degrees * 10
Scaling: 0.1deg/bit
Limits: 0-100 deg (note: value internally limited to allowed range)

> SubIndex 2: **Travel – Degrees Rotation**
Degrees of travel (rotation) setting. If a span is entered that would cause the actuator to try to move beyond the mechanical stop, the travel value is automatically limited to keep the 0 to 100% stroke range within the mechanical stops.

Mapping: not mapped
Access: Read-Write
Data Type: unsigned 16-bit
Units: deg * 10
Scaling: 0.1deg/bit
Limits: 0-100 deg. (note: value internally limited based on device's calibrated travel range)

Object 228F – Auto Stroke Execution

Auto stroke function commands and feedback/status.

To perform an auto-stroke: 1) Ensure safe conditions prior to enabling the function. 2) Select Enable Test 3) Select Initiate Auto Stroke. The auto stroke execution takes approximately 15 seconds. While executing, the auto stroke status will be 1/running. The test is complete when auto stroke state = 7/complete and the status is 0/not running. When 'complete', set the enable and execute back to '0'. The results of the test can be read using the auto stroke status which will either indicate 'No Issues' or identify the first failure. Object 0x228E can be used to read test results values. The auto stroke captures the positions read at the hard stops and stores these values (see Travel Min Position and Travel Degrees Rotation). This is helpful in identifying the stops but in most cases, these need to be modified inward to prevent hitting the stops. Refer to the 'Mechanical Installation' chapter and "actuator Travel Setup' section of the product manual for guidelines.

> SubIndex 0: **Number of Objects**. Access: read-only (constant).

> SubIndex 1: **Enable Auto Stroke**.
Permissive for the auto stroke sequence.

Mapping: not mapped
Access: Read-Write
Data Type: Boolean
Scaling: '1' = enable
Limits: 0-1

> SubIndex 2: **Initiate Actuator Auto Stroke**
Command to execute the actuator auto stroke function. Must be 'enabled' or function will not execute (see sub-index 1). See also sub-indexes 3 and 4 for status feedback.

Mapping: not mapped
Access: Read-Write
Data Type: Boolean
Scaling: '1' = execute
Limits: 0-1

> SubIndex 3: **Auto Stroke State**
Provides an indication of the auto stroke status and results.

Mapping: not mapped
Access: Read-only
Data Type: unsigned 8-bit

Integer Representation
0=idle
1=initial delay
2=finding min
3=setting min
4=drive to max and wait
5=finding max
6=setting max
7=completed
8=aborted

> SubIndex 4: **Auto Stroke Status**
Provides an indication that the auto stroke sequence is running.

Mapping: not mapped
Access: Read-only
Data Type: Boolean (0-not running, 1=running)

Object 2290 – Self Test Execution

Settings relating executing the self-test function.

To perform a self-test: 1) Ensure safe conditions prior to enabling test. 2) Select Enable Test 3) Select Initiate Test. Test execution takes approximately 30 seconds. The test is complete when test state = 10/complete. When 'complete', set the enable and execute back to '0'. The results of the test can be read using the self-test status which will either indicate 'No Issues' or identify the first failure. Object 0x2292 can be used to read test results values. To keep a copy of these test results, perform a 'Assign Historical data array' (0x2290 subindex 6) and a 'save' (0x1010).

> SubIndex 0: **Number of Objects**. Access: read-only (constant).

> SubIndex 1: **Enable Self-Test**.
Permissive for the self-test sequence.

Mapping: not mapped
Access: Read-Write
Data Type: Boolean
Scaling: '1' = execute
Limits: 0-1

> SubIndex 2: **Initiate Self-Test command**
Command to execute the actuator self-test function. Must be 'enabled' or function will not execute (see sub-index 1).

Mapping: not mapped
Access: Read-Write
Data Type: Boolean
Scaling: '1' = execute
Limits: 0-1

> SubIndex 3: **Self-Test State**
Provides an indication of the state of the self-test sequence.

Mapping: not mapped
Access: Read-only
Data Type: bit field (unsigned 8-bits)

Integer Representation
0=Init
1=Jump up
2=Jump down
3=Ramp up
4=Ramp down
5=Bandwidth 1Hz
6=Bandwidth 2Hz
7=Bandwidth 6Hz
8=Stiffness
9=Complete
10=Aborted

> SubIndex 4: **Self-Test Status**
Provides an indication of the self-test results, either no issues or the first failure. If multiple failures are detected, only the first failure is indicated.

Mapping: not mapped
Access: Read-only
Data Type: bit field (unsigned 8-bits)

Integer Representation
0=No Issues
1= Rise Time failed
2= Fall Time failed
3=Overshoot failed
4=Undershoot failed
5=Friction failed
6=Spring Force failed
7=Position Err Up failed
8=Position Err Down failed
9=Phase Err Up failed
10=Phase Err Down failed
11=Mag Ratio failed
12=Stiffness failed
13=Trans Err Up failed
14=Trans Err Down failed
15=Backlash failed

> SubIndex 5: **Capture Initial-Install Self-test Data**
Command to assign the self-test data results to the 'initial-install' baseline data array. To store data permanently into NV memory a save is required (0x1010). The intent of this is to store a copy of the self test data when the engine is initially installed, to compare against with future tests. This command is typically done only once when the engine is built or commissioned.

Mapping: not mapped
Access: Read-Write
Data Type: Boolean
Scaling: '1' = execute
Limits: 0-1

> SubIndex 6: **Assign Data to historical array**
Command to assign the self-test data results to the historical data array. To store data permanently into NV memory a save is required (0x1010). The historical array provides a record of the last 11 saved self-test results and can be viewed using the R-Series Service Tool.

Mapping: not mapped
Access: Read-Write
Data Type: Boolean
Scaling: '1' = execute
Limits: 0-1

Object 2291 – Self Test Settings
Test limit settings to the self-test function.

> SubIndex 0: **Number Of Objects**. Access: read-only (constant).

> SubIndex 1: **Max Friction**.
Sets the maximum friction, in amps.

Mapping: not mapped
Access: Read-Write
Data Type: unsigned 16-bit
Units: mA
Scaling: 1mA/bit
Limits: 0-6000 mA

> SubIndex 2: **Max Rise Time**.
Sets the maximum rise and fall time, in milliseconds.

Mapping: not mapped
Access: Read-Write
Data Type: unsigned 16-bit
Units: msec
Scaling: 1ms/bit
Limits: 0-1200 ms

> SubIndex 3: **Max Position Error**.
Sets the maximum position error (setpoint-actual) during the position up and down ramps, captured between 5 and 95%.

Mapping: not mapped
Access: Read-Write
Data Type: unsigned 16-bit
Units: % * 1000
Scaling: 0.001%/bit
Limits: 0-5%

> SubIndex 4: **Max Transmission Error**.
Sets the maximum transmission range during the position ramps, both up and down. The maximum and minimum values are captured between 10 and 90%, resulting in a range. This limit checks the range of the difference seen between the motor and shaft position signals

Mapping: not mapped
Access: Read-Write
Data Type: unsigned 16-bit
Units: deg * 1000
Scaling: 0.001deg/bit
Limits: 0-5 deg

> SubIndex 5: **Max Spring Force**.
Sets the maximum spring force, in amps.

Mapping: not mapped
Access: Read-Write
Data Type: signed 16-bit
Units: mA
Scaling: 1mA/bit
Limits: -6000 to 6000 mA

> SubIndex 6: **Min Spring Force**.
Sets the minimum spring force, in amps.

Mapping: not mapped
Access: Read-Write
Data Type: signed 16-bit
Units: mA
Scaling: 1mA/bit
Limits: -6000 to 6000 mA

Object 2292 – Self Test Results

Provides the results from the most recent self test.

> SubIndex 0: **Number Of Objects**. Access: read-only (constant).

> SubIndex 1: **Friction**.
The slew time from 10% to 90% position, in milliseconds, on a 0-100% position step.

Mapping: not mapped
Access: Read-Only
Data Type: signed 16-bit
Units: mA
Scaling: 1mA/bit

> SubIndex 2: **Rise Time**.
The slew time from 10% to 90% position, in milliseconds, on a 0-100% position step.

Mapping: not mapped
Access: Read-Only
Data Type: signed 16-bit
Units: msec
Scaling: 1ms/bit

> SubIndex 3: **Fall Time**.
The slew time from 90% to 10% position, in milliseconds, on a 100-0% position step.

Mapping: not mapped
Access: Read-Only
Data Type: signed 16-bit
Units: msec
Scaling: 1ms/bit

> SubIndex 4: **Position Error Up Range**.
The position error is the difference between the commanded position and the actual position. During the position ramp, between 5% and 95%, the maximum and minimum error values are captured. This value indicates this position error range (max-min) detected while ramping position, in percent.

Mapping: not mapped
Access: Read-Only
Data Type: signed 16-bit
Units: % * 1000
Scaling: 0.001%/bit

> SubIndex 5: **Position Error Down Range**.
The position error range (max-min) detected while ramping from 95% to 5% position, in percent.

Mapping: not mapped
Access: Read-Only
Data Type: signed 16-bit
Units: % * 1000
Scaling: 0.001%/bit

> SubIndex 6: **Transmission Error Up Range**.
The position error is the difference between the commanded position and the actual position. During the position ramp, between 5% and 95%, the maximum and minimum error values are captured. This value indicates this position error range (max-min) detected while ramping position, in percent.

Mapping: not mapped
Access: Read-Only
Data Type: signed 16-bit
Units: deg * 1000
Scaling: 0.001%/bit

> SubIndex 7: **Transmission Error Down Range**.
The position error range (max-min) detected while ramping from 95% to 5% position, in percent.

Mapping: not mapped
Access: Read-Only
Data Type: signed 16-bit
Units: deg * 1000
Scaling: 0.001%/bit

> SubIndex 8: **Backlash**.
Amount of backlash, in degrees, determined from the average transmission error (motor-shaft positions) in both the up and down directions.

Mapping: not mapped
Access: Read-Only
Data Type: signed 16-bit
Units: deg * 1000
Scaling: 0.001deg/bit

> SubIndex 9: **Spring Force**.
Amount of spring force determined, in amps, based on the average current to drive the shaft open/closed. A positive value indicates a spring force in the closed direction

Mapping: not mapped
Access: Read-Only
Data Type: signed 16-bit
Units: A * 1000
Scaling: 0.001A/bit

Object 2293 – Time

Provides internal time values in seconds, running and operating times.

> SubIndex 0: **Number Of Objects**. Access: read-only (constant).

> SubIndex 1: **Running Time**.
Indicates the accumulated running time (power-on time) of the device, in seconds.

Mapping: not mapped
Access: Read-Only
Data Type: unsigned 32-bit
Units: seconds
Scaling: 1sec/bit

>> SubIndex 2: **Operating Time**.
Indicates the accumulated time the device has been operating. This state is defined to be when the commanded position is between the defined maximum and minimum limits (inclusive), and the unit is not shutdown or stopped (run/stop).

Mapping: not mapped
Access: Read-Only
Data Type: unsigned 32-bit
Units: seconds
Scaling: 1sec/bit

SAE J1939 Communications

The R-Series actuator supports CAN communications in the SAE J1939 Higher Layer Protocol format. Further detailed information regarding the J1939 Standards Collection can be purchased at **www.sae.org**. Information about CAN may be found in ISO 11898. This version of the R-Series supports the SAE J1939 standard messages defined in J1939-21, J1939-71, J1939-73, and J1939-81 with further details indicated here.

All R-Series J1939 messages use the CAN 2.0B 29-bit Extended Data Frame Format.

Note that in accordance with SAE J1939 definitions, the first instance shall be used when only 1 actuator is used, or for the primary fuel of a dual fuel engine, or for the left bank if a valve/actuator is used on each bank of a Vee engine. The left bank is as seen while facing the engine from the flywheel housing.

The R-Series provides a flexible method to customize how information is sent and received via J1939. Each data parameter (SPN – Suspect Parameter Number) may be assigned to a PGN (Parameter Group Number) and its location within the PGN may be defined using the Service Tool. The Source Address and the J1939 NAME used to acquire a Source Address are configurable. Legacy modes are available as well to provided backward compatibility to ProAct or P-Series models if needed. All of this customization may be done uniquely for each of the four harness ID selections.

Flexible Messaging Definition

Flexible messaging allows the user to customize the content of messages to be sent and received by the R-Series on the J1939 network. This feature allows the user to implement most of the standard actuator and valve types already defined in J1939-71 or to create custom proprietary messages.

The following commands can be optionally received:

- Position Command
- Run/Stop
- Diagnostic Clearing (DM11)
- Previously Active Diagnostic Clearing (DM3) (not supported in 5418-7091 or 5418-6986)

The following data can be optionally transmitted:

- Diagnostic status reporting (DM1 and/or proprietary bit field)
- Actual Position
- Desired Position
- Electronic Temperature
- Operation Status
- Control Mode
- Preliminary FMI and Temperature Status
- Actuator Output Parameters

Additionally, the following data can be requested:

- ECU Identification
- Software Identification
- Previously Active trouble codes (DM2)

Legacy Messaging

Legacy message selection provides a pre-defined set of messages compatible with existing Woodward products. Legacy selections include ProAct Digital and P-Series.

In ProAct Legacy mode, a 32-bit position command can be optionally received and 2 data messages are transmitted. PGN 65296 provides diagnostic/events and PGN 65531 broadcasts valve position data (actual and desired). The command PGN is based on the CAN ID with values of PGN 65302-65305 for units 1 thru 4. The source address is also based on the CAN ID, see table below.

In P-Series Legacy mode one data message is transmitted and one is received. The PGNs for these messages can be configured. The P-Series Legacy command message includes position command, run/stop, clear diagnostics. The transmitted data message includes:

- Diagnostic status reporting (proprietary bit field)
- Actual Position
- Desired Position
- Electronic Temperature
- Operation Status
- Control Mode

If ProAct Legacy mode is configured, the Source Addresses are 19, 20, 21, and 22, otherwise they are set to the user-configured value. The source address is determined on power-up when the discrete inputs are initially read.

Table 5-5. ProAct Legacy Mode Source Addresses

Unit Number	Can ID		Source Address	
	High	Low	P-Series Legacy Mode	ProAct Legacy Mode
1	Off	Off	Configurable	0x13 (19)
2	Off	On	Configurable	0x14 (20)
3	On	Off	Configurable	0x15 (21)
4	On	On	Configurable	0x16 (22)

Diagnostic Reporting

The R-Series supports multiple methods of reporting diagnostic information. These include:

Diagnostic Bit Field
DM1 (Active Diagnostic trouble codes)
DM2 (Previously Active Diagnostic trouble codes)
Preliminary FMI (indicates most severe active fault)
Operation Status (indication of overall device status)

Diagnostic Bit Field

This message is a 32-bit proprietary bit-field indicating status of individual diagnostic faults. This data may be reported (typically in a proprietary PGN) by assigning the Diagnostic Bit Field to a PGN location using the Service Tool. To use the Bit Field:

1. Select Enable from the drop down box in the Service Tool.
2. Provide a PGN number (normally between 65280 and 65535 using the Proprietary B range) in which the R-Series will populate the measured position data.
3. Select the byte within the PGN in which the data is to start. The Bit Field will consume 4 bytes.
4. Provide a PGN Priority and select a transmit Rate. The priority is used in the 29-bit CAN ID as identified by J1939-21. If the same PGN is used elsewhere in the R-Series configuration, the same Priority and Rate must be used each time.

The Bit Field uses the J1939 format of 2 bits / 4 states per parameter:

State	Description
0	The diagnostic condition is not active
1	The diagnostic condition is active
2	Reserved (not used)
3	Not Available (this diagnostic is not supported)

The 32-bits of diagnostics are mapped as follows:

Table 5-6. Diagnostic Bit Field

Position	Description
1.1	Internal Fault Trip*
1.3	Supply Voltage Fault (either Low or High)
1.5	Reserved for Spring Check Failed
1.7	Position Error
2.1	Internal Fault Alarm**
2.3	Unused (set to 3)
2.5	Torque Derating Active (>118 °C)
2.7	Zero Torque (>125 °C)
3.1	Run Enable Input Caused Shutdown
3.3	Demand Tracking Fault
3.5	Loss of all Position Demands
3.7	Analog Demand Failed (either Low or High)
4.1	PWM Failed (Duty Cycle is either Low or High)
4.3	CAN Demand Failed
4.5	Discrete Out Low-Side diagnostic
4.7	Unused (set to 3)

* Internal Fault Trip includes: NV Memory Fault, Shaft Position Sensor Fault, Motor Position Sensor Fault, 12 V Fault (if Shutdown), Position Sensor Deviation (if Shutdown), Coil Current Error (if Shutdown).
** Internal Fault Alarm includes: Configuration Error, Position Sensor Deviation (if Alarm), 12 V Fault (if Alarm), Temperature Sensor failed high or low, Coil Current Error (if Alarm).

Preliminary FMI and Temperature Status

The Preliminary FMI method may be used to report diagnostics. This is a method that is loosely defined in J1939 for many of the actuator/valve types such as Throttle and Compressor Bypass. Preliminary FMI reporting consumes 5 bits and is always paired with the Temperature Status which consumes the other 3 bits of a byte.

A preliminary FMI is a Failure Mode Indicator which reports a diagnostic condition within the R-Series. The following table indicates which diagnostics are reported using this method. If more than 1 diagnostic is active simultaneously, the one higher in the table will be reported (e.g. highest priority is Low Supply Voltage).

Table 5-7. Preliminary FMI

FMI Value	Description
4	Low Supply Voltage
12	Internal Fault Trip*
3	High Supply Voltage
5	Run/Stop Indication
0	Zero Torque Indication (high temperature)
14	Loss of (all) Position Demand(s)
15	Analog Demand Failed (High)
17	Analog Demand Failed (Low)
8	PWM Failed (Duty Cycle is either Low or High)
9	CAN Demand Failed (No Signal)
15	Torque Derating Active (high temperature)
7	Position Error
2	Demand Tracking Fault
16	CAN Demand Signal Out of Range
6	Discrete Out Low-Side Diagnostic Fault
13	Internal Fault Alarm**
31	Normal Operation, No Faults

* Internal Fault Trip includes NV Memory Fault, Shaft Position Sensor Fault, Motor Position Sensor Fault, 12 V Fault (if Shutdown), Position Sensor Deviation (if Shutdown), Coil Current Error (if Shutdown).
** Internal Fault Alarm includes Configuration Error, Position Sensor Deviation (if Alarm), 12 V Fault (if Alarm), Coil Current Error (if Alarm).

The temperature status reports if there is a problem related to the internal temperature of the R-Series. The 3-bit status is defined in the standard as follows:

Table 5-8. Temperature Status

Value	Definition	R-Series Usage
0	High Most severe	Zero Drive Current (Limp)
1	High Least severe	Reduced torque due to temperature > the torque de-rating limit
2	In Range	Temperature is in normal range
3	Low Least severe	Not used in R-Series
4	Low Most severe	Not used in R-Series
5	Not Defined	Not used
6	Error	Onboard temperature sensor is failed high or low
7	Not available	Not used

SAE 1939-73 DM1, DM2, DM3 and DM11 messages

The well-defined DM1 (active diagnostics) and DM2 (previously active diagnostics) may also be used. Any of these methods may be used simultaneously as well.

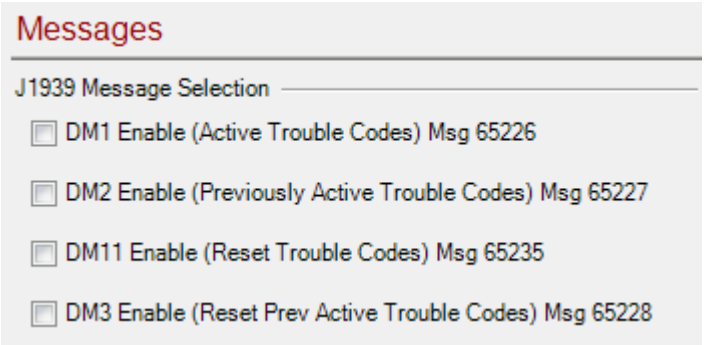

Both active and previously active diagnostics are tracked by the R-Series. When a diagnostic condition is detected, it is added to active history log. Once it clears, it is added to the previously active log as long as the diagnostic is still active, it may be reported using the Diagnostic Bit Field, Preliminary FMI, and/or DM1 (or the Service Tool). If the condition causing the diagnostic is corrected, the Active status will be removed leaving only the previously active log of the diagnostic condition. The previously active log may be viewed using DM2 (or the Service Tool). As a note, according to J1939, if an event is active for the first time, it will not be reported in DM2 until it is no longer active.

Active diagnostics may be reset (if possible) using DM11 if enabled in the configuration settings. Use the request message (PGN 59904) to request the DM11 PGN (65235). Previously active diagnostics may be reset using DM3 if enabled in the configuration settings. Use the request message (PGN 59904) to request the DM3 PGN (65228). The act of requesting either PGN is the trigger that causes the specified reset action to occur. If the action is successful, a positive acknowledgement will be sent by the R-Series. If it is not allowed, a negative acknowledgement will be sent.

Received Data – Commands

Position Demand

When a Position Demand is configured to come via CAN, configuration of the data location becomes visible in the Service Tool. The position demand data format is fixed but the data location is configurable.

To accept this data, the SPN of the Position Command must be provided. This is necessary for DM1 and DM2 reporting and is required to be unique compared to all other configurable SPN values (even if not using DM1 or DM2).

From the J1939-71 standard or from the Proprietary PGN range, select a PGN number in which the R-Series will find the Position Command SPN data. Configure the byte within the PGN in which the data starts. The data is 2 bytes long (16 bits).

Engine Actuator/Valve Control Command SPN

Data length:	2 bytes, unsigned
Resolution:	0.0025%/bit, 0 offset
Range:	0 to 160.6375%
Operational Range:	0 to 100% (0=closed, 100=max position)

Note: The R-Series will cap values between 100% (0x9C40) and 160.6375% (0xFAFF) at 100% and continue to use the position demand as 100%. However, above 0x9C40, a CAN Demand Out-of-Range Error will be annunciated by the R-Series. If the value exceeds the Valid Signal range (> 0xFAFF or 64255) the CAN Demand Bad Signal Fault will be set.

Rx Message Setup

	Size	SPN	Enable	PGN	Start Bit
Position Command	16-bit	3464		61466	1.1
Run/Stop Command	2-bit		☐	65306	2.3

Run/Stop Command

It is possible to control the Run status via CAN. However, there is no public standard J1939 message for this feature so it must be manually mapped into a PGN. Select Enable and configure the PGN in which the R-Series will find the Run/Stop Command data. Configure the byte and bit position within the PGN in which the data starts. The data is 2 bits long.

The Run/Stop Command uses the J1939 format of 2 bits / 4 states per parameter:

State	Description
0	Run
1	Shutdown
2	Reserved (no change in operating state)
3	Not Supported (no change in operating state)

Transmitted Data – Status Reporting

There are 7 different data points that can be transmitted, actual position, desired position, prelim-FMI + temperature status, operation status, control mode, diagnostic bit field, and electronics temperature. Any one or all can be configured/enabled, up to seven transmitted messages could be configured. The data in each of these messages is detailed in this section.

Tx Message Setup

	Size	SPN	Enable	PGN	Start Bit	Priority	Rate
Actual Position	8-Bit	51	☑	65266	7.1 (8-bit)	6	100 ms
Desired Position	8-bit		☑	64754	1.1	6	100 ms
Prelim FMI & Temp Status	8-bit		☑	64754	2.1	6	100 ms
Operation Status	4-bit		☑	64755	7.1	6	100 ms
Control Mode Status	4-bit		☐	65312	1.1	6	2 s
Diagnostic Bit Field	32-bit		☐	65312	5.1	6	2 s
Electronic Temperature	8-bit	5783	☑	64713	1.1	6	100 ms
Actuator Output Parameters	64-bit		☐	65312		6	100 ms
R-Series Device		5419					

Engine Valve/Actuator Position

The Engine Valve/Actuator Position reports the actual measured position. To send this data, the SPN of the Position Data must be provided. This is necessary for DM1 and DM2 reporting and is required to be unique compared to all other configurable SPN values (even if not using DM1 or DM2).

The data is selectable as either 1 (8 bits) or 2 bytes long (16 bits).

From the J1939-71 standard or from the Proprietary PGN range, select a PGN number in which the R-Series will populate the measured position data. Configure the byte within the PGN in which the data is to reside.

Engine Valve/Actuator Position SPN – **8-Bit**

Data length:	1 byte, unsigned
Resolution:	0.4%/bit, 0 offset
Range:	0 to 100%
Operational Range:	0 to 100% (0=closed, 100=fully open)
Error State:	254 (0xFE) Sent if either shaft or motor position sensors are failed.

Engine Valve/Actuator Position SPN – **16-Bit**

Data length:	2 bytes, unsigned
Resolution:	0.0025%/bit, 0 offset
Range:	0 to 160.6375%
Operational Range:	0 to 100% (0=closed, 100%=fully open)
Error State:	65279 (0xFEFF) Sent if either shaft or motor position sensors are failed.

Engine Desired Valve/Actuator Position

The Engine Desired Valve/Actuator Position reports the target position. If redundant position demands are used, this SPN will report the position demand based on the currently selected and active demand.

From the J1939-71 standard or from the Proprietary PGN range, select a PGN number in which the R-Series will populate the desired position data. Configure the byte within the PGN in which the data is to reside. The data is 1 byte long (8 bits).

Engine Desired Valve/Actuator Position SPN

Data length:	1 byte, unsigned
Resolution:	0.4%/bit, 0 offset

Range: 0 to 100%
Operational Range: 0 to 100% (0=closed, 100=fully open)
Error State: 254 (0xFE) Sent if all position command inputs are failed

Engine Valve/Actuator Operation Status

The operation status reports alarm (warning) and shutdown (error) conditions by severity. It provides a simple method for an engine control to understand if the R-Series is operating normally or shutdown.

From the J1939-71 standard or from the Proprietary PGN range, select a PGN number in which the R-Series will populate the operation status data. Configure the byte and bit position within the PGN in which the data is to reside. The data is 4 bits long.

The Operation Status uses the J1939 format of 4 bits / 16 states per parameter as defined below:

Table 5-9. Operation Status

Value	Definition	R-Series Usage
0	Normal	No diagnostic conditions are active
1	Alarm	Operational but needs service
2	Alarm High Severity	Functional but accuracy may be reduced
3	Derate Active	Torque output reduced due to Temperature Status
4	Controlled Shutdown Active	Driving to the default position – usually this means closed
5	Uncontrolled Shutdown Active	Actuator current is off so it is limp
6–13	Reserved for future assignment	Not used in R-Series
14	Error	Not used in R-Series
15	Not available	Not used in R-Series

Engine Valve/Actuator Control Mode Status

The control mode status reports what demand source is being used. It is a simple way for the engine control to get feedback on which of a pair of redundant command inputs is actually being used. It also provides the current state of the discrete output.

From the J1939-71 standard or from the Proprietary PGN range, select a PGN number in which the R-Series will populate the control mode status data. Configure the byte and bit position within the PGN in which the data is to reside. The data is 4 bits long.

The Control Mode Status uses the J1939 format of 3 bits / 8 states per parameter as defined below:

Table 5-10. Control Mode Status

Value	R-Series Usage
0	Primary demand is in control and no Backup is configured or the Backup signal is OK
1	Primary demand is in control and the Backup signal is failed
2	Backup demand is in control and the Primary signal is failed
3	All demand signals are failed
4	Primary Demand enabled but not active / delay from Backup control
5	Not used in R-Series
6	Error (Not used in R-Series)
7	Not Available (Not used in R-Series)

The discrete output status is a single bit that occupies the first bit position of the 4. A ‘1’ indicates the output is “on” and a ‘0’ indicates the output is “off”.

Control Mode Status Field:

Bit 4	Bit 3	Bit 2	Bit 1
Discrete Status	Control Mode		

Engine Valve/Actuator Temperature

The Engine Valve/Actuator Temperature reports the internal electronics temperature of the R-Series.

From the J1939-71 standard or from the Proprietary PGN range, select a PGN number in which the R-Series will populate the desired position data. Configure the byte within the PGN in which the data is to reside. The data is 1 byte long (8 bits).

Engine Valve/Actuator Temperature SPN

Data length:	1 byte, unsigned
Resolution:	1 °C/bit, –40 offset
Range:	–40 °C to 210 °C
Operational Range:	–40 °C to 210 °C
Error State:	254 (0xFE) Sent if the temperature sensor is failed

Actuator Output Parameters data message

This message provides current and torque data for the actuator output, typically for troubleshooting purposes.

The message data includes the following:

Byte 1-2: Estimated Current
Byte 3-4: Estimated Load
Byte 5: Peak Positive Current
Byte 6: Peak Negative Current
Byte 7: Torque Margin
Byte 8: Supply Voltage

There is no public standard J1939 message for this feature so it must be manually mapped into a PGN, typically from the Proprietary PGN range. Select Enable and configure the message PGN, priority and update rate. The data is 64 bits (8 bytes) long.

Transmission repetition rate: configurable, 100 ms default

Data length:	8 bytes
Data Page:	0
PDU format:	configurable PGN, default 255
PDU specific:	configurable PGN, default 32
Default priority:	configurable, default 6
PGN:	4 configurable PGNs provided, one for each unit number (default 65312)

Data:

Byte 1-2: Estimated Current

Data is the average value of the estimated current over the configured message transmit time/rate. Data is scaled in percentage of steady state current. Example if the message transmit rate is 100ms, then the data will represent the average over the previous 100ms timeframe. When the ‘rate’ is set to ‘On Request’, a 1 second average interval is used. When requested, the value will represent the average over the last capture 1-sec interval.

Data length:	2 bytes
Resolution:	0.0078125%/bit, -251% offset
Range:	-251 to 250.99% (0x00 to 0xFAFF)

Error Indicator set (0xFEFF) if a coil current fault is set (failed).

Byte 3-4: Estimated Load
Data is the average value of the estimated load over the configured message transmit time/rate. Data is scaled in percentage of steady state current. When the 'rate' is set to 'On Request', a 1 second average interval is used.

Data length: 2 bytes
Resolution: 0.0078125%/bit, -251% offset
Range: -251 to 250.99% (0x00 to 0xFAFF)
Error Indicator set (0xFEFF) if a coil current fault is set (failed).

Byte 5: Peak Positive Current
Data will indicate the maximum positive estimated current during the time period defined by the configured message transmit rate. Data is scaled in percentage of steady state current. When the 'rate' is set to 'On Request', a 1 second average interval is used. When requested, the value will represent the average over the last capture 1-sec interval. If the current did not go positive during the time period, a value of zero would be transmitted. Data is rounded up, a value of 5.5% would indicate 6%.

Data length: 1 byte
Resolution: 1.0%/bit gain, 0% offset
Range: 0 to 250% (0x00 to 0xFA)
Error Indicator set (0xFE) if a coil current fault is set (failed).

Byte 6: Peak Negative Current
Data will indicate the absolute value of the maximum negative estimated current during the time period defined by the configured message transmit rate. Data is scaled in percentage of steady state current. When the 'rate' is set to 'On Request', a 1 second average interval is used. If the current did not go negative during the time period, a value of zero would be transmitted. Data is rounded down, a value of -5.5% would indicate -6%.

Data length: 1 byte
Resolution: 1.0%/bit gain, 0% offset
Range: 0 to 250% (0x00 to 0xFA)
Error Indicator set (0xFE) if a coil current fault is set (failed).

Byte 7: Torque Margin
Data will indicate the torque margin at the time of the transmitted message. Data is scaled in percentage of steady state current.

Data length: 1 byte
Resolution: 0.4%/bit, 0 offset
Range: (0 to 100)% (0x00 to 0xFA)
Error Indicator set (0xFE) if a coil current fault is set (failed).

Byte 8: Supply Voltage
Data will indicate the supply voltage at the time of the transmitted message. Data is scaled in percentage of 32V.

Data length: 1 byte
Resolution: 0.4%/bit, 0 offset
Range: (0 to 100)% (0x00 to 0xFA)
Error Indicator set (0xFE) if a supply voltage fault high or low is set.

P-Series Legacy Mode Definition

The messages below apply when the P-Series Legacy Mode is selected.

Command Message (Rx) - P-Series Legacy Mode

This message is received by the R-Series when CAN position command is configured.

Transmission rep rate:	10 ms or as required (msg timeout must be set accordingly)
Data length:	8 bytes
Data page:	0
PDU format:	configurable PGN
PDU specific:	configurable PGN
Suggested priority:	1 (high)
PGN:	4 configurable PGNs provided, one for each unit number

Data:

Bytes 1-2: Position command

Data length: 2 bytes
Resolution: 0.0025%/bit, 0 offset
Range: (0 to 160.6375)% (0x00 to 0xFAFF)

Note: The position demand setpoint is limited internally between 0% and 100%. Values between 100% (0x9C40) and 160.6375% (0xFAFF) will be capped at 100% and continue to use the flow demand as 100%. However, above 0x9C40, a CAN Bad Signal (Out-of-Range Error) will be annunciated by the R-Series.

Byte 3: Command bits

Data length: 1 byte
Bits 0-1: Reset Active Diagnostics
- 00 No action
- 01 Reset action *
- 10 Reserved
- 11 Not supported

Bits 2-3: Reset Logged Diagnostics
- 00 No action
- 01 Reset action *
- 10 Reserved
- 11 Not supported

Bits 4-5: Operation Control (Run/Stop)
- 00 No action
- 01 Shutdown
- 10 Reserved
- 11 Not supported

Bits 6-7: RESERVED/NOT USED

* A reset action should be preceded by a no action command or the R-Series will not perform the requested action - the bits cannot remain in a ‘01’ state. The reset action occurs only upon the transition from 00 to 01.

Bytes 4-8: RESERVED/NOT USED (Send as 0xFF in each byte)

Data Message (Tx) - P-Series Legacy Mode

Transmission repetition rate: 100 ms
Data length: 8 bytes
Data Page: 0
PDU format: configurable PGN
PDU specific: configurable PGN
Default priority: 6
PGN: 4 configurable PGNs provided, one for each unit number

Data:

Byte 1: Actual Valve Position
Data length: 1 byte
Resolution: 0.4%/bit, 0 offset
Range: (0 to 100)% (0x00 to 0xFA)
Error Indicator set (0xFE) if position sensor is failed.

Byte 2: Desired Valve Position
Data length: 1 byte
Resolution: 0.4%/bit, 0 offset
Range: (0 to 100)% (0x00 to 0xFA)
Error Indicator set (0xFE) if all position demands are failed.

Byte 3: Electronics Temperature
Data length: 1 byte
Resolution: 1 □C/bit gain, -40 □C offset
(Subtract 40 from received value to recover □C value)
Range: -40 to +210 □C (0x00 to 0xFA)
Error Indicator set (0xFE) if temperature sensor is failed.

Byte 4: Status Bits
Data length: 1 byte
Bits 1-4: Operation Status (see definition below)
Bits 5-7: Control Mode (see definition below)
Bit 8: Discrete Output ON indication (0=off, 1=on)

Operation Status
0000 Normal
0001 Alarm *(Fully operational but needs service)*
0010 Alarm High Severity *(Functional but transient performance may be reduced)*
0011 Derate active *(Torque output reduced due to environmental conditions)*
0100 Controlled Shutdown active *(Driving to the default position—usually this means closed)*
0101 Uncontrolled Shutdown active *(Actuator current is off so it is limp)*
0110-1101 Reserved for future assignment
1110 Error
1111 Not available

Control Mode
000 Primary Demand in Control
001 Primary Demand in Control, Backup Failed
010 Backup Demand in Control, Primary Failed
011 All Demand Signals Failed, actuator in default position
100 Primary Demand enabled but inactive, delay from backup control
101 Reserved for future assignment
110 Error
111 Not available

Byte 5: Active Diagnostic Indications 1
Data length: 1 byte
Bit 1: Internal Fault Trip[1]
Bit 2: Stop commanded (Run/Stop discrete in)
Bit 3: Input (Supply) Voltage Fault
Bit 4: Position Error
Bit 5: Temperature Sensor Fault
Bit 6: Torque Derating Active (high temperature)
Bit 7: Zero Torque Indication (high temperature)
Bit 8: External Fault Detected[3]

Byte 6: Active Diagnostic Indications 2
Data length: 1 byte
Bit 1: Internal Fault Alarm[2]
Bit 2: Loss of Position Demand
Bit 3: Demand Tracking Fault
Bit 4: Analog Position Demand Failed
Bit 5: PWM Position Demand Failed
Bit 6: CAN Position Demand Failed
Bit 7: CAN Fault (CAN Bus Off, CAN Address Claim Error)
Bit 8: CAN Stop Command

Byte 7: Previously Active[4] Diagnostic Indications 1 (same format as byte 5)

Byte 8: Previously Active[4] Diagnostic Indications 2 (same format as byte 6)

FOOTNOTES

[1] Internal Fault Trip includes: NV Memory Fault, Shaft Position Sensor Fault, Motor Position Sensor Fault, 12V Fault (if Shutdown), Position Sensor Deviation (if Shutdown).
[2] Provided in R-Series however feature not available in P-Series. Internal Fault Alarm includes: Configuration Error, Position Sensor Deviation (if Alarm), 12V Fault (if Alarm), Coil Current error.
[3] Provided in R-Series however feature not available in P-Series. Includes: Spring Check Failed, Discrete Out diagnostic.
[4] Previously active indications provided however indications differ from Logged Fault P-Series indications. Previously active indications go false when the active indication is true whereas with Logged Faults this was not the case.

Note: All Units report using the same PGN when set to Legacy Mode. If more than one unit is present on the same CAN network, the receiving ECU must use source address filtering to identify which actuator the message is received from.

ProAct Legacy Mode Definition

In ProAct Legacy mode, a 32-bit position command can be optionally received and 2 data messages are transmitted. The messages below apply when the ProAct Legacy Mode is selected. The source address is fixed as 19, 20, 21, or 22 based on the CAN ID selected unit number (1-4).

Command Message (Rx) - ProAct Legacy mode

Transmission rep rate:	5 ms max
Data length:	4 bytes
Data page:	0
PDU format:	255
PDU specific:	22, 23, 24, 25—for unit number 1-4
Suggested priority:	1 (high)
PGN:	65302 (FF16), 65303 (FF17), 65304 (FF18), 65305 (FF19)—for unit number 1-4

Data:

Bytes 1-4: Position command

Data length: 4 bytes
Resolution: 2.56E-8%/bit, -5 offset
Range: (–5 to +105)% (scaled from 0x00 to 0xFFFFFFFF)

Note: The position demand setpoint is limited internally between 0% and 100%.

Data Message (Tx) - ProAct Legacy Mode

Transmission repetition rate: 100 ms
Data length: 8 bytes
Data Page: 0
PDU format: 255 (FF)
PDU specific: 251 (FB)
Default priority: 7
PGN: 65531 (FFFB)

Data:

Byte 1: Actual Valve Position

Data length: 1 byte
Resolution: 0.3922%/bit, 0 offset
Range: (0 to 100)% (0x00 to 0xFF)
Error Indicator not used.

Byte 2: Desired Valve Position

Data length: 1 byte
Resolution: 0.3922%/bit, 0 offset
Range: (0 to 100)% (0x00 to 0xFF)
Error Indicator not used.

Byte 3-8: Not Used (sent as 0xFF in each byte)

Diagnostics Message (Tx) - ProAct Legacy Mode

Transmission repetition rate: 100 ms
Data length: 8 bytes
Data Page: 0
PDU format: FF
PDU specific: 10
Default priority: 6
PGN: 65296 (FF10)

Bit code legend

The following diagnostics and events status will be sent by the ProAct actuator in a sequence.

Bit Code	Description
00	Inactive
01	Active
10	Reserved
11	Not Available

Bit position in a byte is “8 7 6 5 4 3 2 1”
Bit position 1 is the least significant bit.
Example: Bit position 2 is “1” and all others bits are “0”, byte value is 2.

Data:

Byte 1: Diagnostic Indications 1
- Bits 1-2: Stop commanded (Run/Stop)
- Bits 3-4: Loss of All Position Commands [1,2]
- Bits 5-6: Internal Fault Trip[5]
- Bits 7-8: Internal Fault Alarm [1,6]

Byte 2: Diagnostic Indications 2
- Bits 1-2: Primary Demand Failed [1]
- Bits 3-4: Backup Demand Failed [1]
- Bits 5-6: General Alarm indication[3]
- Bits 7-8: General Shutdown indication[3]

Byte 3-4: Not Used (sent as 0xFF in each byte)

Byte 5: Event Indications 1
- Bits 1-2: Position Error
- Bits 3-4: High Temp Alert
- Bits 5-6: Temp Limiting Active[1]
- Bits 7-8: 24 V Supply High

Byte 6: Event Indications 2
- Bits 1-2: 24 V Supply Low
- Bits 3-4: Low Temp Alert [3]
- Bits 5-6: Power up reset (Not Implemented) [3]
- Bits 7-8: Derating Active Indication[4]

Byte 7: Event Indications 3
- Bits 1-2: Zero Torque Indication [4]
- Bits 3-4: Discrete out diagnostic
- Bits 5-8: Not Used (sent as 0xFF)

Byte 8: Not Used (sent as 0xFF in each byte)

FOOTNOTES

[1] Provided in ProAct Digital Plus however feature not available in ProAct ISC.
[2] ProAct ISC value was CAN Demand Failed.
[3] Provided in ProAct ISC however feature not available in ProAct Digital Plus.
[4] Provided as additional indication in Pseries Legacy mode however not available in ProAct Digital Plus or ProAct ISC.
[5] Internal Fault Trip includes: NV Memory Fault, Shaft Position Sensor Fault, Motor Position Sensor Fault, 12V Fault (if Shutdown), Position Sensor Deviation (if Shutdown).
[6] Internal Fault Alarm includes: Configuration Error, Position Sensor Deviation (if Alarm), 12V Fault (if Alarm), Coil Current Error.

Common Messages

The messages listed in this section are used in both Legacy Mode and Custom Mode. These include: ACL, SOFT, ACK, and RQST.

Additional Messages

This section identifies the additional messages that are supported. These include: ACL, SOFT, ECUID, ACK and RQST.

PGN 60928 Address Claimed (ACL)

Address Claimed / Cannot Claim Message

Transmission rate:	on start-up, on request, response to Address Claimed
Data length:	8 bytes
Data Page:	0
PDU format:	238
PDU specific:	255
Default priority:	6
Parameter Group Number:	60928 (0xEE00)

Bytes 1.1 - 3.5: (21 bits) Identity Number, SPN 2837
Bytes 3.6 - 4.8: (11 bits) Manufacturer Code, SPN 2838
Byte 5.1: (3 bits) ECU Instance, SPN 2840
Byte 5.4: (5 bits) Function Instance, SPN 2839
Byte 6.1: (8 bits) Function, SPN 2841
Byte 7.1: (1 bit) Reserved
Byte 7.2: (7 bits) Vehicle System, SPN 2842
Byte 8.1: (4 bits) Vehicle System Instance, SPN 2843
Byte 8.5: (3 bits) Industry Group, SPN 2846
Byte 8.8: (1 bit) Arbitrary Address Capable, SPN 2844

The Address Claimed message will be sent out shortly after power has been applied to the R-Series. The Address Claimed message will also be sent out in response to a Request for Address Claimed. The Request for Address Claimed can be sent to a specific Address or to the Global Destination Address, 255. The R-Series will respond to a specific query, or one to the Global Destination Address, 255.

The Source Address for the R-Series is configurable uniquely for each Unit Number using the Service Tool. The R-Series will only try to claim the configured address. If a higher priority device claims the configured address, the R-Series will stop communicating as defined per SAE J1939.

The Address Claimed Message will also be sent out if the R-Series receives an Address Claimed message from the same Address as the receiving node and a lower priority (higher value) NAME. The entire 8-byte value of the NAME is used for arbitration with the Arbitrary Address Capable Field as the Most Significant Bit.

The Cannot Claim Address message will be sent out if the R-Series receives an Address Claimed message with the same Source Address as the receiving node and with a higher priority (lower value) NAME. The entire 8-byte value of the NAME is used for arbitration with the Arbitrary Address Capable Field as the Most Significant Bit. The Cannot Claim Address will also be sent out in response to a Request for Address Claimed if the address was unsuccessfully claimed.

The Cannot Claim Address message is identical to the Address Claimed message in all aspects except that the Source Address of the R-Series is replaced with 254. The Cannot Claim Address message will be sent out with a 0–153 millisecond pseudo-random delay between the reception of the triggering message and the transmission of the Cannot Claim Address message.

If the R-Series cannot claim an Address a status bit will be set and any position demand value from CAN will be forced to zero (this may cause a shutdown depending on demand source settings).

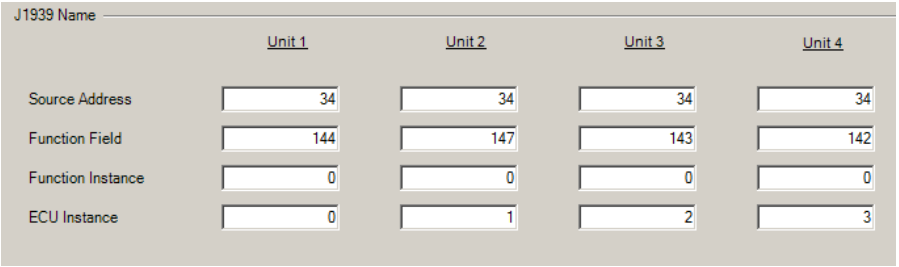

R-Series NAME:

Table 5-11. J1939 NAME

Component	Setting	Value	Configurable?
Arbitrary Address Capable Field	Not Supported	0	No
Industry Group Field	Global	0	No
Vehicle System Instance Field	First Instance	0	No
Vehicle System Field	Non-specific system	0	No
Function Field	Unspecified	255	Yes
Function Instance Field	First	0	Yes
ECU Instance Field	Unit 1 Unit 2 Unit 3 Unit 4	0 1 2 3	Yes
Manufacturer Code Field	Woodward Governor Industrial Controls	153	No
Identity Number Field	Unique	Unique	No

See Appendix A for examples of each NAME component. See J1939-81 Section 4.1.1 for additional details on J1939 NAME.

PGN 59904 Request (RQST)

PGN Request Message. Sent by Engine Control (or Tool) to the R-Series to obtain a PGN that is not sent cyclically and used with DM3 and DM11.

Transmission rate: As needed
Data length: 3 bytes
Data Page: 0
PDU format: 234
PDU specific: R-Series Source Address
Default priority: 6
Parameter Group Number: 59904 (0xEA00)

Bytes 1-3: (24 bits) Parameter Group Number requested, SPN 2540

As defined in SAE J1939-21, if the PGN to be requested is a PDU1 type (PDU format field <240) then the lower byte of the PGN number (the PDU specific byte) shall be set to 0.

To request the Software ID PGN, use this request message with the data equal to 65242.

PGN 65242 Software Identification (SOFT) message

Transmission repetition rate: On Request (R-Series ➔ Engine Control)
Data length: Variable
Data Page: 0
PDU format: 254
PDU specific: 218
Default priority: 6
Parameter Group Number: 65242 (0xFEDA)

Data:

Byte 1: Number of Software Identification Fields, SPN 965

Data length:	1 byte
Resolution:	1 /bit, 0 offset
Range:	0 to 250 (0x00 to 0xFA)
Actual value:	1 (R-Series will always report 1)

Bytes 2 - (N+1): Software Identification, SPN 234

Data length:	up to 200 characters
Resolution:	ASCII, 0 offset
Range:	0 to 255 per byte
Actual value:	Depending on current software version: 54186986_NEW 54187091_NEW RSeries_5418-7415- RSeries_5418-7415A

Byte (N+2): Delimiter, SPN 234

Data length:	1 byte
Resolution:	ASCII, 0 offset
Range:	0 to 255 (0x00 to 0xFA)
Actual value:	42 (0x2A)
Character:	*

PGN 64965 ECU Identification Information (ECUID) message

Transmission repetition rate: On Request (R-Series ➔ Engine Control)

Data length:	Variable
Data Page:	0
PDU format:	253
PDU specific:	197
Default priority:	6
Parameter Group Number:	64965 (0xFDC5)

Data:

a: ECU Part Number, SPN 2901

Data length:	variable, part number followed by an "*" delimiter
Resolution:	ASCII, 0 offset
Range:	0 to 255 per byte
Actual value:	Upper-level assembly part number. e.g. 8410-002

b: ECU Serial Number, SPN 2902

Data length:	variable, serial number followed by an "*" delimiter
Resolution:	ASCII, 0 offset
Range:	0 to 255 per byte
Actual value:	Upper-level assembly serial number

c: ECU Location, SPN 2903

Data length:	5 bytes followed by an "*" delimiter
Resolution:	ASCII, 0 offset
Range:	0 to 255 per byte
Actual value:	‘unitX’ where ‘X’ is the unit number based on the harness code (1-4)

d: ECU Type, SPN 2904

Data length:	3 bytes followed by an "*" delimiter
Resolution:	ASCII, 0 offset
Range:	0 to 255 per byte
Actual value:	‘POS’ (80 79 83)

e: ECU Manufacturer Name, SPN 4304

Data length:	8 bytes followed by an "*" delimiter
Resolution:	ASCII, 0 offset
Range:	0 to 255 per byte
Actual value:	‘Woodward’ (87 111 111 100 119 97 114 100)

f: ECU Hardware ID, SPN 6714

Data length:	variable, part number followed by an "*" delimiter
Resolution:	ASCII, 0 offset
Range:	0 to 255 per byte
Actual value:	Hardware part number (e.g. 602-1465)

PGN 59392 Acknowledgment (ACK)

This message is sent by the R-Series (as a NACK) as needed according to the protocol.

Transmission rate:	As needed
Data length:	8 bytes
Data Page:	0
PDU format:	232
PDU specific:	Destination Address
Default priority:	6
Parameter Group Number:	59392 (0xE800)

Data:

Byte 1: Control Byte

0: Positive Acknowledgement (Reset action was successful)

1: Negative Acknowledgement (Reset action unsuccessful or PGN not available)

Bytes 2-4: Group Function and Reserved

The R-Series does not use these bytes. Sent as 255.

Byte 5: Source Address of device being acknowledged (or NACK'd)

Bytes 6-8: PGN being acknowledged (or NACK'd)

See J1939-21 for further details on the data.

Chapter 6.
Service Tool

Introduction

This chapter covers the process of installing and servicing the control by using the R-Series Service Tool. It is assumed that the control has already been installed on the engine.

IMPORTANT

Many R-Series actuators are delivered pre-configured and calibrated with OEM specific settings. These units do not require the use of the Service Tool. However, the Service Tool is a valuable troubleshooting aid.

WARNING

An unsafe condition could occur with improper use of these software tools. Only trained personnel should have access to these tools.

Stay clear of the actuator output shaft and all equipment that may be actuated by the Discrete or Analog Output, as sudden movement can occur at any time. Failure to comply with this recommendation can cause personal injury and/or property damage.

The R-Series can be controlled remotely, make sure area is clear before connecting tool.

All outputs are capable of changing states in Run Mode. Any outputs connected to the R-Series can suddenly move with this change of state. Use caution when using this tool

Description

The Service Tool software is used to configure, setup and troubleshoot the R-Series actuator. This chapter describes the installation and use of the Service Tool. It identifies the control parameters available for viewing. Detailed instructions for configuring and setting up the R-Series control for the customer-specific application is provided in Chapter 7.

Connection and configuration for all R-Series actuators is provided in one Service Tool. The R-Series Service Tool software resides on a PC (personal computer) and communicates to the R-Series control via CAN connection. A USB-to-CAN is available for purchase from Woodward, part number 5404-1189. Additional details are provided in Chapter 3.

System Requirements

The following hardware is required to work with the R-Series control:

- PC-compatible laptop or desktop computer
- For Woodward Toolkit version 4.8 (preferred version):
  - Microsoft Windows 8.1, 8, 7, Vista SP1 or newer
  - Microsoft .NET Framework version 4.5.1
- For Woodward Toolkit version 4.7 (non-preferred version):
  - Microsoft Windows 8.1, 8, 7, Vista SP1 or newer, XP SP3 (32- & 64-bit) *note support for XP ended 2014-Apr*
  - Microsoft .NET Framework version 4.0
- 1 GHz CPU or faster x86 or x64 processor
- 1 GB of RAM
- Minimum 800 by 600 pixel screen with 256 colors

- Recommended screen resolution 1024 x 768 of higher
- USB Port, USB-to-CAN IXXAT or Kvaser CAN adapter and driver

System Default Font

A system default font of 'large fonts' will cause some data on the Service Tool to be displayed incorrectly. From the Display Settings in the Control Panel the text size / DPI setting cannot be set to ‘large’; set it to normal or small.

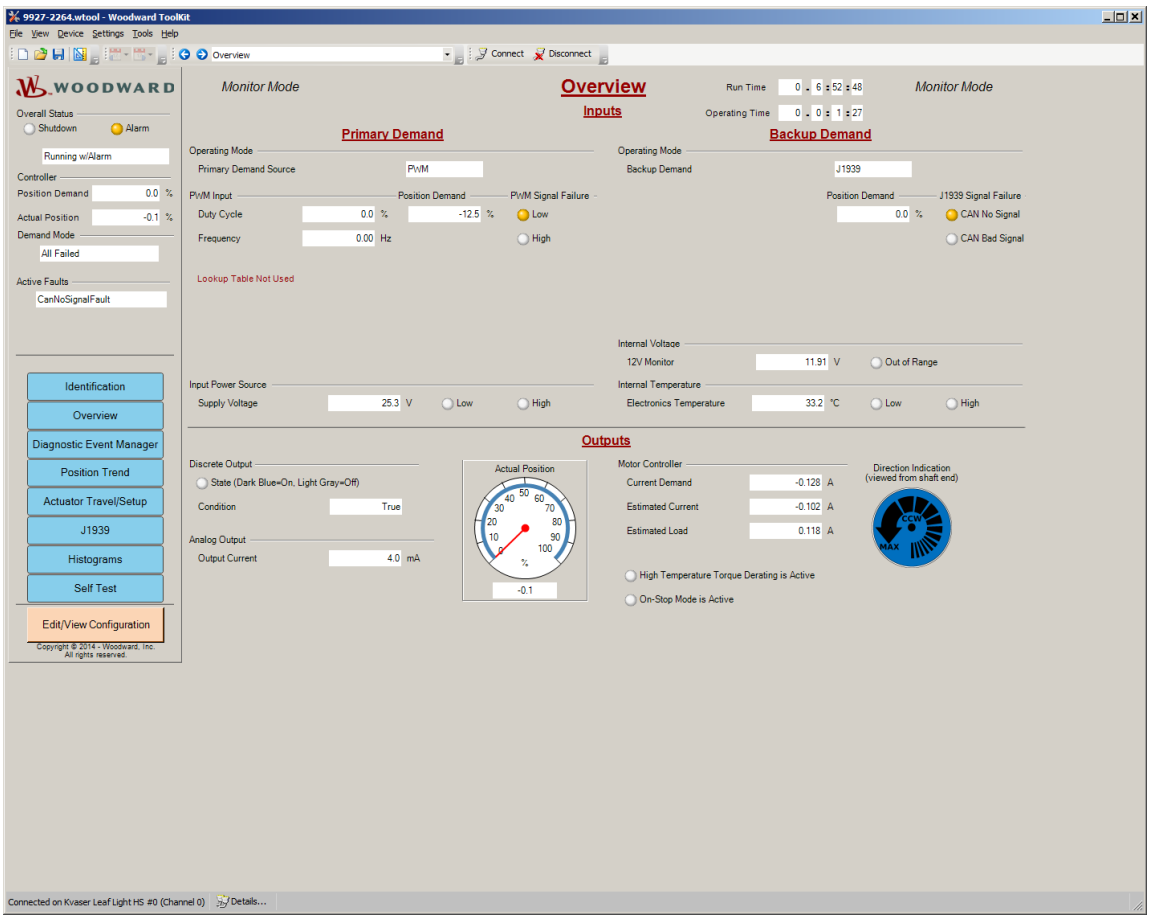

Figure 6-1. Example Service Tool Screen

Getting Started

Installation Procedure

The R-Series Service Tool software can be downloaded and installed from the Woodward Internet site (www.woodward.com/software). The Service Tool is based on Woodward Toolkit software which is also available for download on the internet site, Woodward Toolkit version 4.7 or newer is required.

What To Do Next

After the software is installed, connect a USB-to-CAN interface to an unused USB port on your computer. The CAN connection on the R-Series is either on pins TB1-4 and TB1-5 (CAN1) or on pins TB1-7 and TB1-8 (CAN2). See Chapter 3 for details. Power must be applied to the R-Series control for the Service Tool to connect.

Run the appropriate Service Tool program and select an available communication port. Connect to the R-Series control by clicking the connect button on the tool bar. Communication settings must be properly set to allow communications between these devices (see Figure 6-3). The connection settings required are listed below.

Network: choose an available network, the R-Series requires CAN communication
Protocol: XCP
Baud Rate: 250k for CAN1*, 1000k for CAN2
Command: 188C0BF9
Response: 188BF90B

*Note that CAN1 data rate is configurable as 250k, 500k and 1000k. Baud rate selection must match device configuration. CAN2 data rate is fixed at 1000k and is a suggested ‘backdoor’ option if unsuccessful with CAN1 connection attempts.

Future connections can automatically use these same settings, if desired, by selecting the ‘Always connect to my last selected network’.

Figure 6-2. Connect to Device

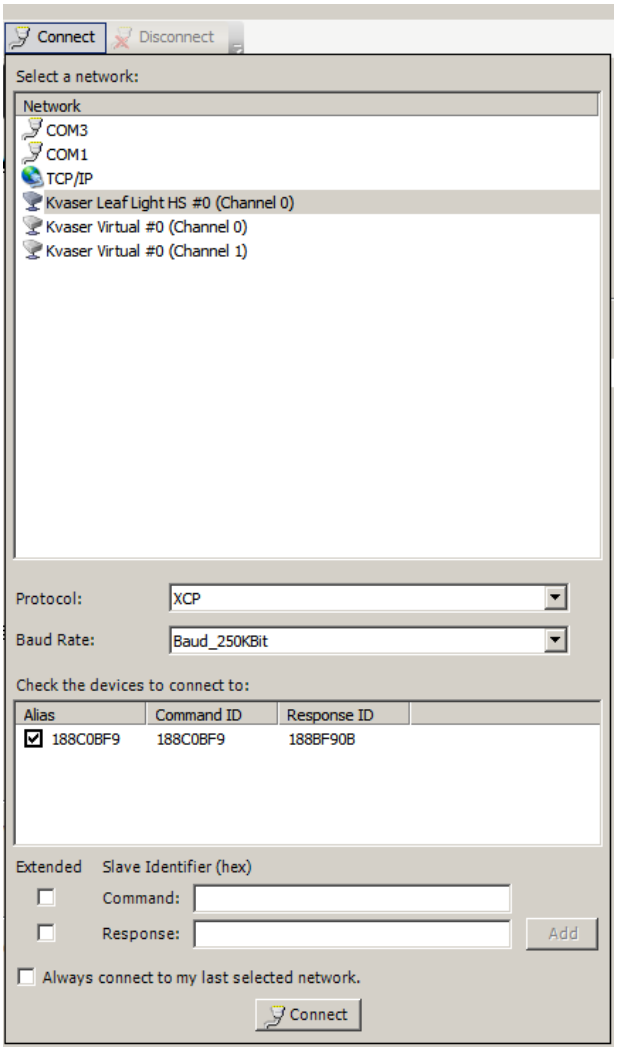

Figure 6-3. Connection Settings

During connection, the device will need to be selected from the Tool Devices pull-down (e.g. Device1). This selection is found at the bottom of the screen, see Figure 6-4. Active values will not be displayed until a device is selected.

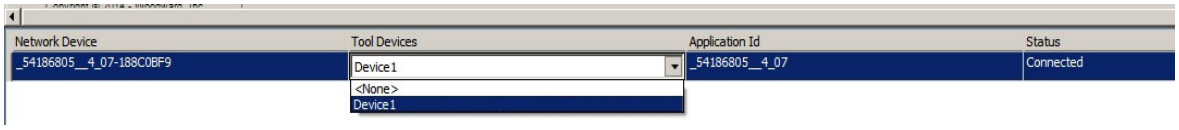

Figure 6-4. Device Selection

Once connected to the control, the screen view will populate with current values and the status bar will display ‘Connected on …’ (lower left corner of tool).

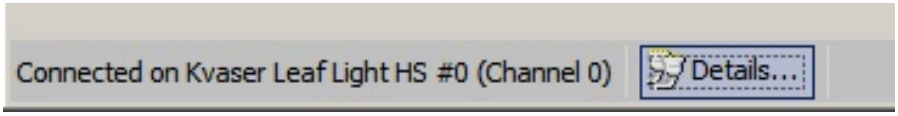

Figure 6-5. Connected Status Indication

The Application firmware version can be verified by clicking on the Details button on the bottom of the screen. The Application Id is the firmware version of the connected device. This window is closed by clicking on the Details button again.

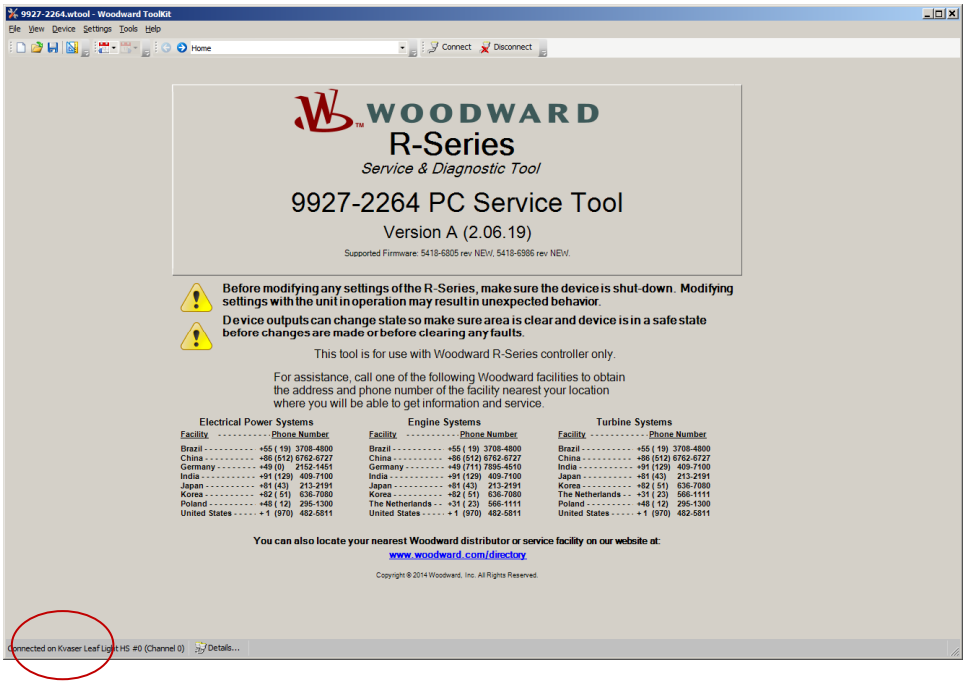

Figure 6-6. Communications Window

The following window appears if the Service Tool cannot find the correct service interface definition (SID) file to communicate with the device. If this occurs, the device is not compatible with the Service Tool version. The latest versions can be downloaded at www.woodward.com.

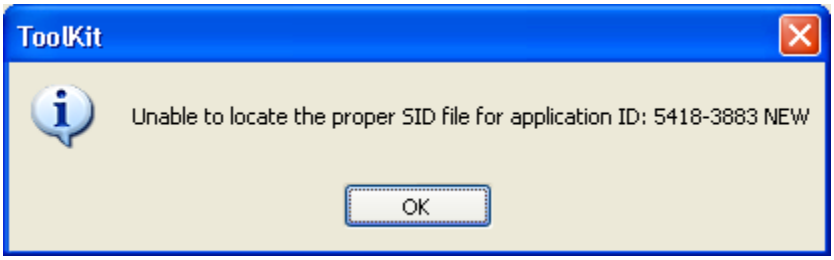

Figure 6-7. Improper SID Window

Service Tool Help

Online Service Tool help is available and included with the installation of the Service Tool product. Help can be accessed from the Service Tool 'Help' menu located on the Main Window.

Service Tool Security

There are no password security levels provided by the R-Series Service Tool.

Troubleshooting the Driver

All Service Tools have the following screens for troubleshooting driver parameters:

- Identification (Figure 6-8)
- Overview (Figure 6-9)
- Diagnostics (Figure 6-10)
- Position Trend (Figure 6-12)
- Actuator Travel/Setup (Figure 6-18)
- CAN (Figure 6-23)
- Histograms (Figure 6-26)
- Self-test (Figure 6-27)
- Self-test Log (Figure 6-29)

Screen Navigation

Service Tool screens can be selected for viewing in a variety of ways:

- Pull Down Box on the tool bar
- Next/Previous Page buttons on the tool bar
- Page Up/Page Down keyboard keys.
- Navigation buttons

Identification Screen

To view part-number and serial number information, go to the Identification screen.

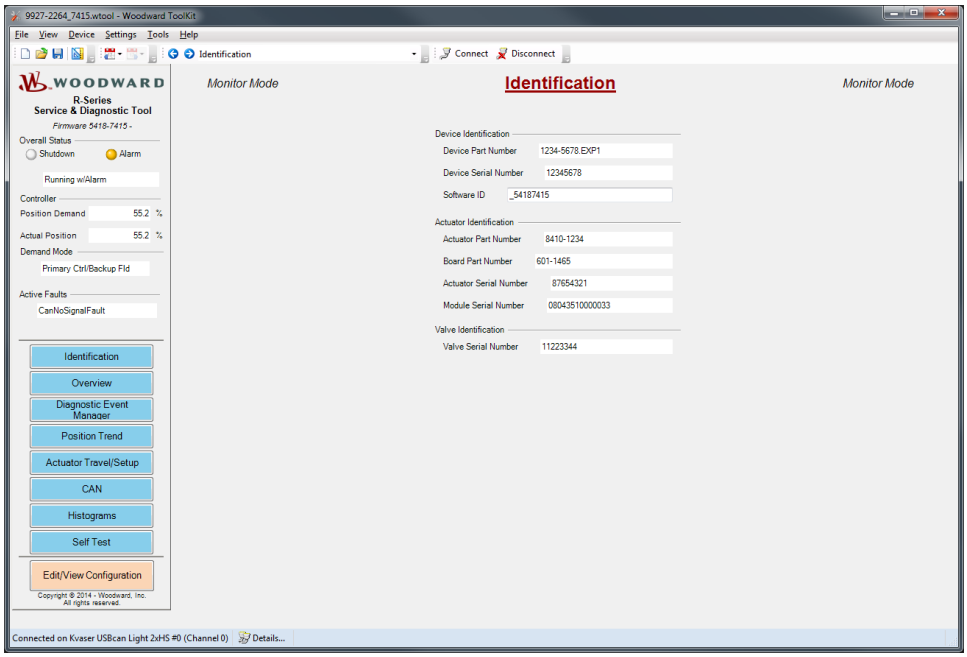

Figure 6-8. Identification Screen

Device Identification Section

Device Part Number

Displays the device upper level part number.

Device Serial Number

Displays the device upper level serial number.

Software ID

Indicates the software part number and revision.

Actuator Identification Section

Actuator Part Number and Revision *(not available in firmware 5418-6986, part number only in firmware 5418-7091)*
Displays the actuator part number and revision

Actuator Revision *(firmware 5418-7091 only)*
Displays the revision of the actuator part number.

Actuator Serial Number
Displays the actuator serial number.

Board Part Number
Displays part number of the installed control board.

Module Serial Number
Displays serial number of the installed control board.

Valve Identification Section

Valve Serial Number
Displays the valve serial number.

Dashboard Section

The Dashboard provides a section of information to be displayed on the left-hand side of all normal operating pages. This section provides common device information and quick navigation to specific screens.

Overall Status Section

Shutdown LED
Indicates an active shutdown condition when illuminated (Red). The dashboard's Active Faults box will display all active faults. Additional details are provided on the Diagnostic Event Manager screen.

Alarm LED
Indicates an active alarm condition when illuminated (orange).

Status
Displays the overall diagnostic status of the unit (alarm/shutdown). This status can include the following messages: Running w/No Faults, Running w/Alarm, Stopped (Run/Stop), Shutdown to Position, Shutdown to Posn (timed), Shutdown Limp, TEST MODE. Individual diagnostics are identified on the Active Faults marquee and on the Diagnostic Event Manager page.

Indication	Meaning
Running w/No Faults	No faults are detected.
Running w/Alarm	An alarm fault is detected.
Stopped (Run/Stop)	A STOP is commanded using the Run/Stop feature.
Shutdown to Position	The device is in shutdown condition, positioning at the configured shutdown position.
Shutdown to Posn (timed)	The device is in shutdown condition, positioning at the configured shutdown position. It will maintain this mode until the configured delay time expires at which time it will go to the limp mode. This is displayed when the configured shutdown mode is 'shutdown to position then limp'.
Shutdown Limp	The device is in shutdown condition, the shaft output is limp (no drive current).
TEST MODE	Indicates the position command is in an unconfigured state, test mode is active.

Controller Section

Position Demand
Displayed value of the active Position Setpoint – in percent.

Actual Position
Displayed value of the Actual Position – in percent.

Demand Mode *(only displayed if backup demand is configured)*
Displays the demand status. The configured primary and backup demand sources (J1939, Analog, PWM) are displayed on the Overview screen.

Indication	Meaning
Primary in control	The primary demand is in control of the position setpoint.
Primary Ctrl/Backup Fld	The primary demand is in control and the backup demand is failed.
Backup Ctrl/Primary Fld	The primary demand is in control and the backup demand is failed.
All Failed	Indicates both the primary and the backup demands are failed.
Backup Ctrl/Primary OK	Backup demand is in control and the primary demand is okay. This mode occurs during the fallback transition time.
Unconfigured	Indicates the demand source is unconfigured.

Active Faults
The window displays all active faults in a scrolling manner, meaning it displays each active fault and repeats continuously. Displays ‘(None)’ when all faults are cleared. Select the Diagnostic Event Manager screen to see additional details.

Overview Screen

To view general R-Series control parameters, go to the Overview screen. Content on this screen is auto-generated, based on the configured features. It is divided into 2 major sections, inputs and outputs. Primary and backup demand signal details are provided in the inputs section along with input power source voltage and internal electronics temperature. The outputs section displays information on the discrete output, analog output and motor controller.

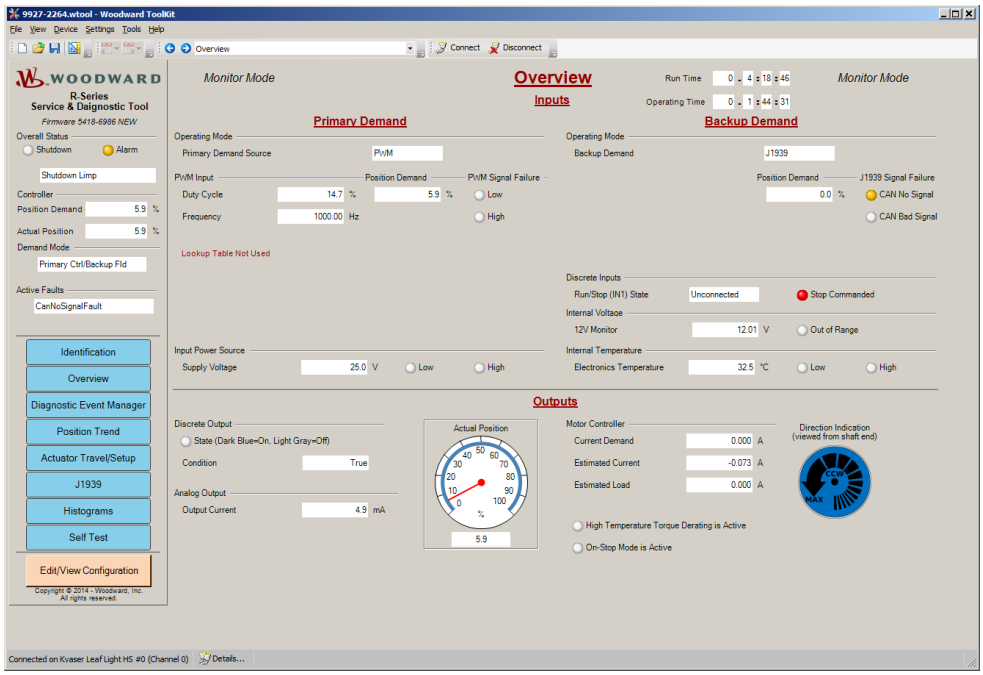

Figure 6-9. Overview Screen

Time Indications

Data format is days.hours:minutes:seconds.

Run Time
Indicates the accumulated time the device has been powered-up. This value is captured as the last occurred time in the event manager.

Operating Time
Indicates the accumulated time the device has been operating. This state is defined to be when the commanded position is between the defined maximum and minimum limits (inclusive), and the unit is not shutdown or stopped (run/stop). See Chapter 7 for Operating Time Setup.

Primary Demand and Backup Demand Sections

Primary Demand Source
Displayed value of the configured primary demand source (Analog, CAN, or PWM).

Backup Demand Source
Displayed value of the configured backup demand source (Analog, CAN, or PWM).

PWM Input Section *(only displayed if PWM demand is configured)*

PWM Input, Current Reading
Indicates the value of the PWM Input Duty Cycle – in percent.

PWM Input, Position Demand
Displayed value of the PWM Input scaled to position demand before being limited between 0% and 100% – in percent.

PWM Input, Frequency
Displayed value of the PWM Input Frequency – in hertz.

PWM Signal Failure Low LED
When on, indicates the input duty cycle is diagnosed as below the low failure threshold.

PWM Signal Failure High LED
When on, indicates the input duty cycle is diagnosed as above the high failure threshold.

Lookup Table Output
Provides the numeric value of the 11-point lookup table output, only displayed when lookup table is configured as used. When table is not configured for use, displays ‘lookup table not used’.

Analog Input Section *(only displayed if Analog demand is configured)*

Analog Input, Used Input Range
Displayed value of the Analog Input Type (4-20 mA or 0-200 mA).

Analog Input, Current Reading
Displayed value of the Analog Input – in amps or volts dc.

Analog Input, Position Demand
Displayed value of the Analog Input scaled to position demand before being limited between 0% and 100% – in percent.

Analog Signal Failure Low LED
When on, indicates the input current is diagnosed as below the low failure threshold.

Analog Signal Failure High LED
When on, indicates the input current is diagnosed as above the high failure threshold.

CAN Demand Input Section *(only displayed if CAN demand is configured)*

CAN Demand
Displayed value of the CAN Input scaled to position demand before being limited between 0% and 100% – in percent.

CAN Signal Failure, CAN No Signal LED
When on, indicates the CAN demand input as either not present/detected or is too slow. To be considered too slow, the interval between received commands must be faster than the configured CAN No Signal Timeout threshold

CAN Signal Failure, CAN Bad Signal LED
When on, indicates the data in the CAN position command message is above 100% indicating an invalid value.

Input Power Source Section

Supply Voltage
Displayed value of the input voltage, in volts, as read by the processor.

Failed Low LED
When on, indicates the input voltage is diagnosed as below the low failure threshold.

Failed High LED
When on, indicates the input voltage is diagnosed as above the high failure threshold.

Discrete Inputs Section

Run/Stop (IN1) State
Indicates the status of discrete input 1 Run/Stop input (Low, High, Unconnected).

Stop Commanded LED
When on, indicates a STOP is active as commanded by this discrete input.

Internal Voltage Section

12V Monitor
Displayed value of the internal 12V power, in volts, as read by the processor.

Out of Range LED
When on, indicates the voltage is out of normal operating range.

Internal Temperature Section

Electronics Temperature
Displayed value of the electronics temperature sensor, in °C, as read by the processor.

Failed Low LED
When on, indicates the temperature is diagnosed as below the low failure threshold.

Failed High LED
When on, indicates the temperature is diagnosed as above the high failure threshold.

Outputs Section

Discrete Output Section

Discrete Output State
Indicates the discrete output driver is ‘on’ when the LED is blue. Depending on the configured normally-energized setting, this may be inverted from the condition state. For example, when set to normally-energized, the output will be ON when all conditions are false (see Discrete Output Condition).

Discrete Output Condition
Provides an indication of the logic value of the discrete output condition, based on the configured options. When configured as ‘Shutdown’, this indication is true if any shutdown conditions are active and false when they are all cleared.

Analog Output Section

Output Current
Displayed value of the analog output commanded, in milliamps.

Motor Controller Section

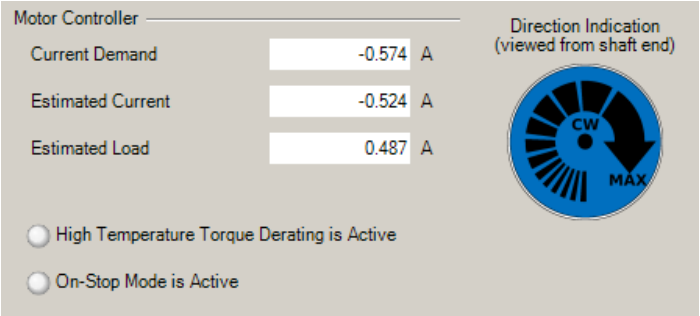

Current Demand
Displayed value of the coil current demanded, in amps.

Estimated Current
Displayed value of the estimated actuator coil current, in amperes, as calculated by the controller observer.

Estimated Load
Displayed value of the estimated load, in amperes, as calculated by the controller observer.

Direction Indication
Graphical display of the configured direction of rotation (CW vs CCW). Shows direction of increased position when looking at the shaft end of the device.

High Temperature Derating is Active LED
Indicates reduced actuator power output operation (due to detection of high actuator temperature) when illuminated (orange).

On Stops Mode is Active LED
When on, indicates device is driving into the stop using current control as opposed to position control. This is typically used to reduce the input current (power) draw when controlling at the valve stop.

On Minimum Stop LED *(only appears when indication is active)*
When blue, indicates the ‘On Stops mode’ function is active. Current control mode is active, device is using the configured minimum stop hold current.

On Maximum Stop LED *(only appears when indication is active)*
When blue, indicates the 'On Stops mode' function is active. Current control mode is active, device is using the configured maximum stop hold current.

Shaft Direction Indication

- **CW**– indicates the actuator rotation as clockwise for opening (increasing position demand).
- **CCW**– indicates the actuator rotation as counterclockwise for opening (increasing position demand).

Changes to shaft direction must be made in the Configuration mode, see Chapter 7 for details.

IMPORTANT

Actuator rotation is determined while looking into the actuator shaft end:

Clockwise

Counterclockwise

Diagnostic Event Manager

This screen displays the status of active and previously active fault conditions. Each diagnostic also displays a type, occurrence counter and time last occurred. Details on each diagnostic is provided in Chapter 4.

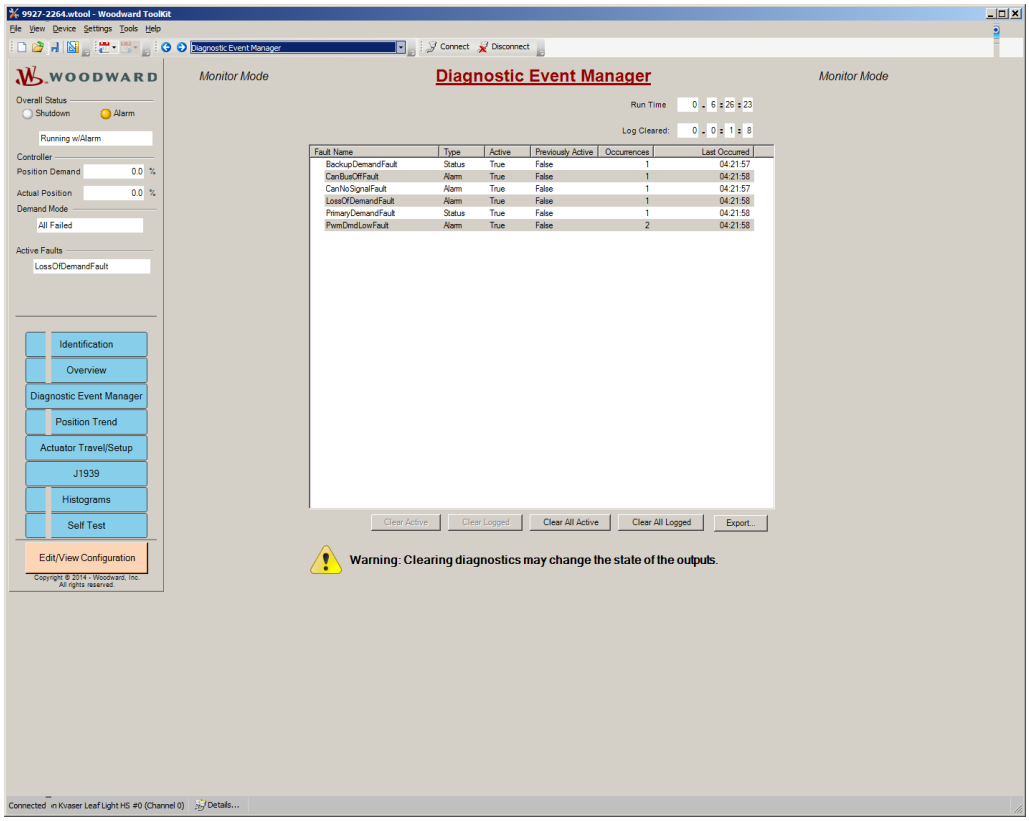

Figure 6-10. Diagnostics Screen

WARNING

Clearing diagnostics may change the state of device outputs. Stay clear of the actuator output shaft and all attachments. Failure to comply with this recommendation can cause personal injury and/or property damage.

Run Time
Indicates the accumulated time the R-Series device has been powered-up. This value is captured as the last occurred time in the event manager. Data format is days.hours:minutes:seconds .

Log Cleared
Indicates the run time of the last log clear command (clear all logged). Data format is days.hours:minutes:seconds .

Clear Active or Clear All Active buttons
Active faults are those presently detected, or previously detected but latched and not reset. To clear active faults that are latched on, click the 'Clear Active Faults' button. If configured as non-latching, active faults self-clear when the fault condition no longer exists. When a single fault is selected/highlighted, it can be individually cleared with the 'Clear Active' button.

Clear Logged or Clear All Logged buttons
A previously active fault is one that has occurred but is no longer active or latched in the control. Logged faults are non-volatile and can only be cleared by clicking the 'Reset Logged Faults' button on the Shutdowns or Alarms screens. When a single fault is selected/highlighted, it can be individually cleared with the 'Clear Logged' button.

Export Button
Click the Export button to save file the values of the event manager. The format of the file is html but it can be opened for analysis using other programs (example Excel Figure 6-11).

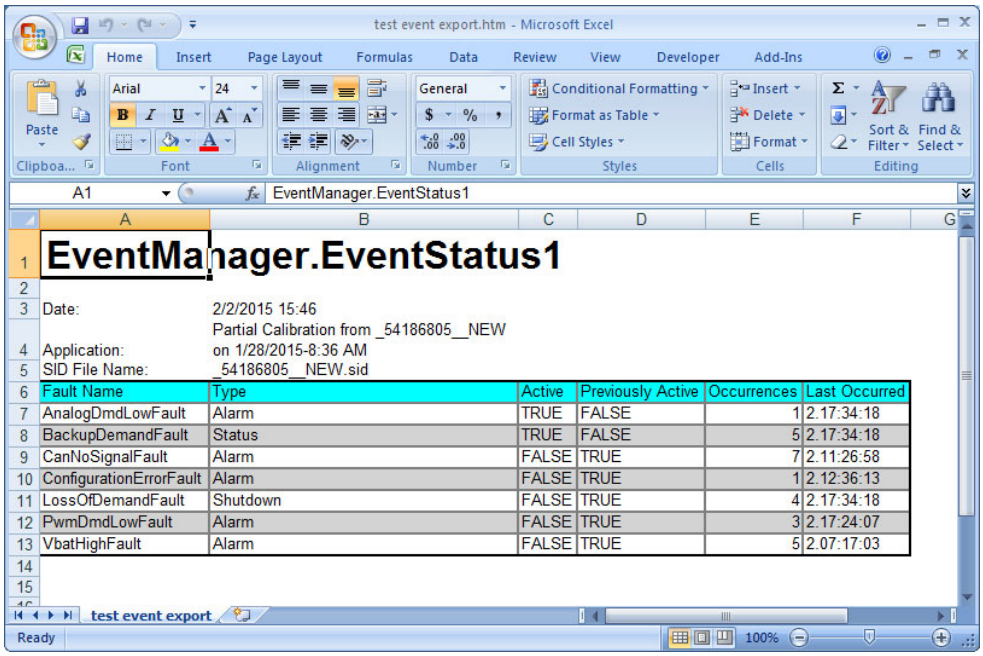

Figure 6-11. Diagnostic Event Export Example

IMPORTANT **Refer to Chapter 4 for a complete listing and description of all the fault conditions.**

Position Trend Screen

This screen offers a trend screen as well as the ability to manually control the shaft position

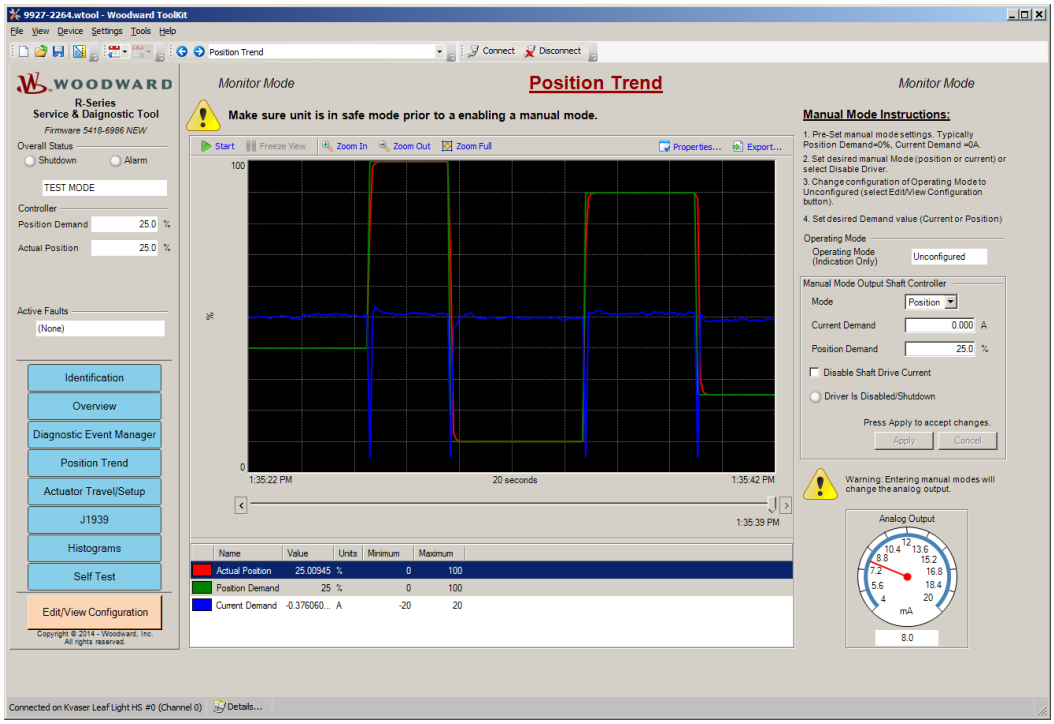

Figure 6-12. Position Trend Screen

The following are the pre-set trend parameters. These can be modified by selecting ‘properties’, instructions are provided later in this chapter.

- Actual Position (Default range is 0% to 100%)
- Position Setpoint (Default range is 0% to 100%)
- Current Demand (Default range is –20 A to +20 A)

Start/Stop

Click the Start button to begin a position trend. Click the Stop button to freeze the currently displayed values. Clicking the Start button again erases the frozen values and begins trending current values again.

WARNING **Stay clear of the actuator output shaft and all attachments as sudden movement can occur at any time. Failure to comply with this recommendation can cause personal injury and/or property damage.**

IMPORTANT **Sample rate is not deterministic. While you can get very useful information from these plots, the sample rate is approximate, and the time between samples is only as good as the Windows OS is providing at that moment.**

Manual Mode section

Manual position control is useful for stroking the actuator from the min and max positions to verify the actuator travel is correct, that the linkage moves freely and the stops are properly set. This feature is also useful for stroking the actuator to the desired end positions and reading the actual position in degrees to manually enter Span and Offset settings if desired (see Actuator Travel/Setup screen).

Manual position control is also useful for stroking the actuator to view the dynamic response. Step changes can be made by setting the manual position demand (setpoint).

Mode
Selection of either manual position mode of manual current mode. This selected mode will be active when the operating mode is set to Unconfigured. When in manual current mode, the shaft drive output will be set to control current at the 'Current Demand' value. Similarly in manual position mode, the shaft drive output will be set to control position at the 'Position Demand' value.

Current Demand
Sets the coil current when the manual current mode is active. Allow range is –16 A to 16 A

Position Demand
Sets the commanded position when the manual position mode is active. Allowed range is 0 to 100%

Disable Shaft Drive Current
When selected, disables off the drive current to the actuator shaft

Driver is Disabled/Shutdown LED
When red, indicates the 'Disable Shaft Drive Current' is active.

Manual Mode Instructions

Manual position control and manual current control modes are provided on the trend screen to facilitate testing the actuator travel, linkage or valve setup and dynamic response. For safety purposes, manual modes can only be activated when the device operating mode is set to Unconfigured.

1) Prior to enabling manual mode, it is advised to pre-set the manual mode settings. Set the desired values and current or position mode. Press Apply to accept the changes (see Figure 6-13), selecting Cancel will revert values back.
2) Change operating mode configuration of the primary position command source to Unconfigured. Steps to do this are:
    a. Select the 'Edit/View Configuration' button, which opens the configuration window.
    b. Then select the General Setup page.
    c. Modify the Primary Demand Source to Unconfigured.
    d. Select OK, which applies the change and closes the configuration window.
3) To change the current or position setpoint, highlight the present value and type in a new value and press Apply.
4) When completed with manual modes, change the operating mode back to the value prior to testing by following the steps listed in 2) above.

⚠WARNING

Entering manual modes and/or changing modes may change the state of device outputs. Stay clear of the actuator output shaft and all attachments. Failure to comply with this recommendation can cause personal injury and/or property damage.

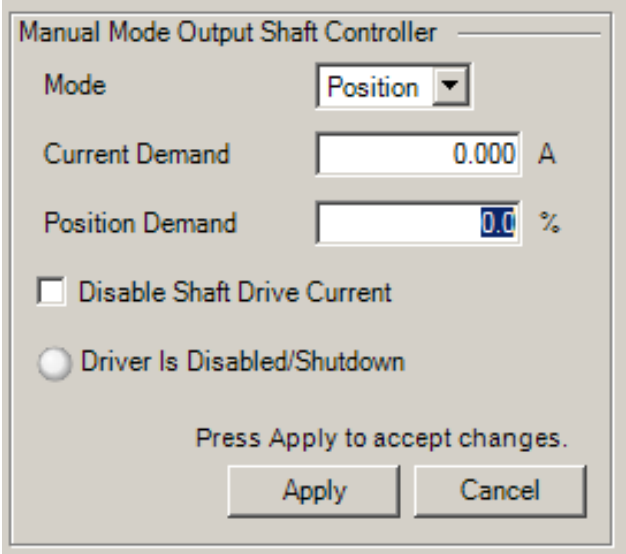

Figure 6-13. Position Trend Screen – Manual Control

Properties

Trend properties can be changed. Click the Properties button to open the Trending Properties window (Figure 6-14). From this window the trend time span, sample rate, pen colors and high and low range scaling can be changed.

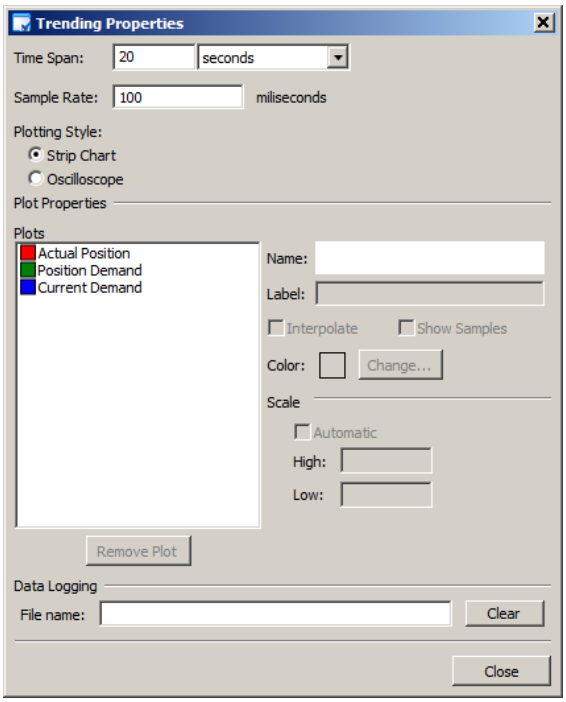

Figure 6-14. Trending Properties Window

Checking the show samples option causes the trend plot points to be displayed as enclosed points on the displayed trend.

Click Color Change to select a different plot color for the highlighted plot.

Checking the automatic scale option dynamically sets the range at the maximum and minimum values measured during a trend run. Checking the automatic scale check box overrides the high and low range

scaling settings. Un-checking uses the high and low settings. Click ‘X’ to close the Trend Properties pop up window.

Export

Click the Export button to save file the values of the trend data points taken during the time period just prior to clicking the stop button (Figure 6-15a). The format of the file is html but it can be opened for analysis using other programs (example Excel Figure 6-15b).

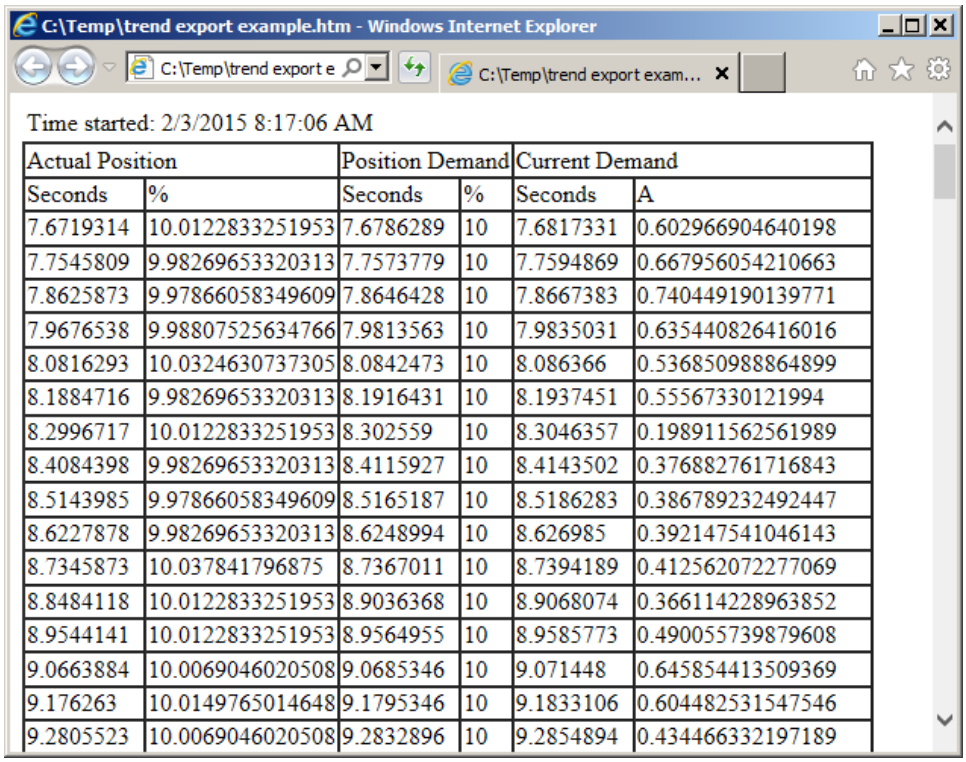

C:\Temp\trend export example.htm - Windows Internet Explorer

Time started: 2/3/2015 8:17:06 AM

Actual Position		Position Demand		Current Demand	
Seconds	%	Seconds	%	Seconds	A
7.6719314	10.0122833251953	7.6786289	10	7.6817331	0.602966904640198
7.7545809	9.98269653320313	7.7573779	10	7.7594869	0.667956054210663
7.8625873	9.97866058349609	7.8646428	10	7.8667383	0.740449190139771
7.9676538	9.98807525634766	7.9813563	10	7.9835031	0.635440826416016
8.0816293	10.0324630737305	8.0842473	10	8.086366	0.536850988864899
8.1884716	9.98269653320313	8.1916431	10	8.1937451	0.55567330121994
8.2996717	10.0122833251953	8.302559	10	8.3046357	0.198911562561989
8.4084398	9.98269653320313	8.4115927	10	8.4143502	0.376882761716843
8.5143985	9.97866058349609	8.5165187	10	8.5186283	0.386789232492447
8.6227878	9.98269653320313	8.6248994	10	8.626985	0.392147541046143
8.7345873	10.037841796875	8.7367011	10	8.7394189	0.412562072277069
8.8484118	10.0122833251953	8.9036368	10	8.9068074	0.366114228963852
8.9544141	10.0122833251953	8.9564955	10	8.9585773	0.490055739879608
9.0663884	10.0069046020508	9.0685346	10	9.071448	0.645854413509369
9.176263	10.0149765014648	9.1795346	10	9.1833106	0.604482531547546
9.2805523	10.0069046020508	9.2832896	10	9.2854894	0.434466332197189

Figure 6-15a. Trend Data Points (in web browser)

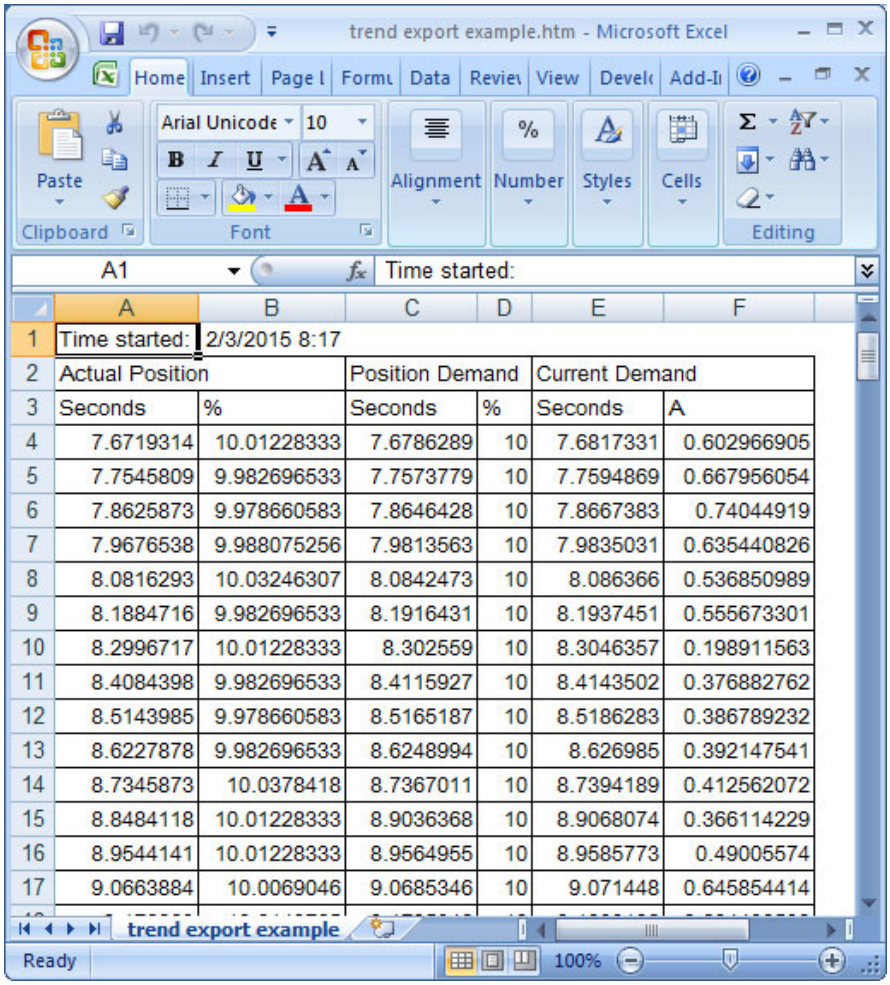

	A	B	C	D	E	F
1	Time started:	2/3/2015 8:17				
2	Actual Position		Position Demand		Current Demand	
3	Seconds	%	Seconds	%	Seconds	A
4	7.6719314	10.01228333	7.6786289	10	7.6817331	0.602966905
5	7.7545809	9.982696533	7.7573779	10	7.7594869	0.667956054
6	7.8625873	9.978660583	7.8646428	10	7.8667383	0.74044919
7	7.9676538	9.988075256	7.9813563	10	7.9835031	0.635440826
8	8.0816293	10.03246307	8.0842473	10	8.086366	0.536850989
9	8.1884716	9.982696533	8.1916431	10	8.1937451	0.555673301
10	8.2996717	10.01228333	8.302559	10	8.3046357	0.198911563
11	8.4084398	9.982696533	8.4115927	10	8.4143502	0.376882762
12	8.5143985	9.978660583	8.5165187	10	8.5186283	0.386789232
13	8.6227878	9.982696533	8.6248994	10	8.626985	0.392147541
14	8.7345873	10.0378418	8.7367011	10	8.7394189	0.412562072
15	8.8484118	10.01228333	8.9036368	10	8.9068074	0.366114229
16	8.9544141	10.01228333	8.9564955	10	8.9585773	0.49005574
17	9.0663884	10.0069046	9.0685346	10	9.071448	0.645854414

Figure 6-15b. Trend Data Points (in Excel)

Creating a Custom Trend

Any control parameter can be trended by merely right clicking the value.

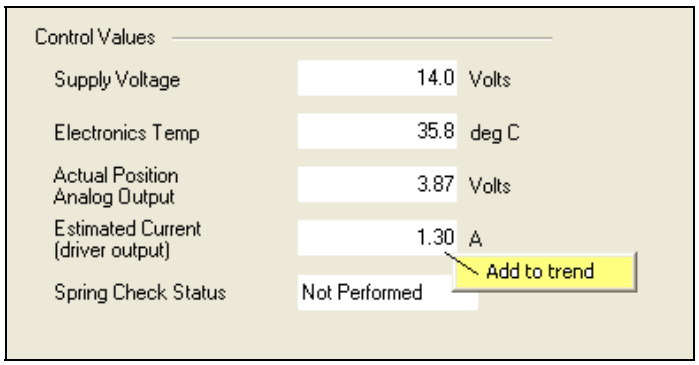

Figure 6-16. Custom Trend

For example, right clicking the Estimated Current then clicking ‘Add to trend’ produces the following trend.

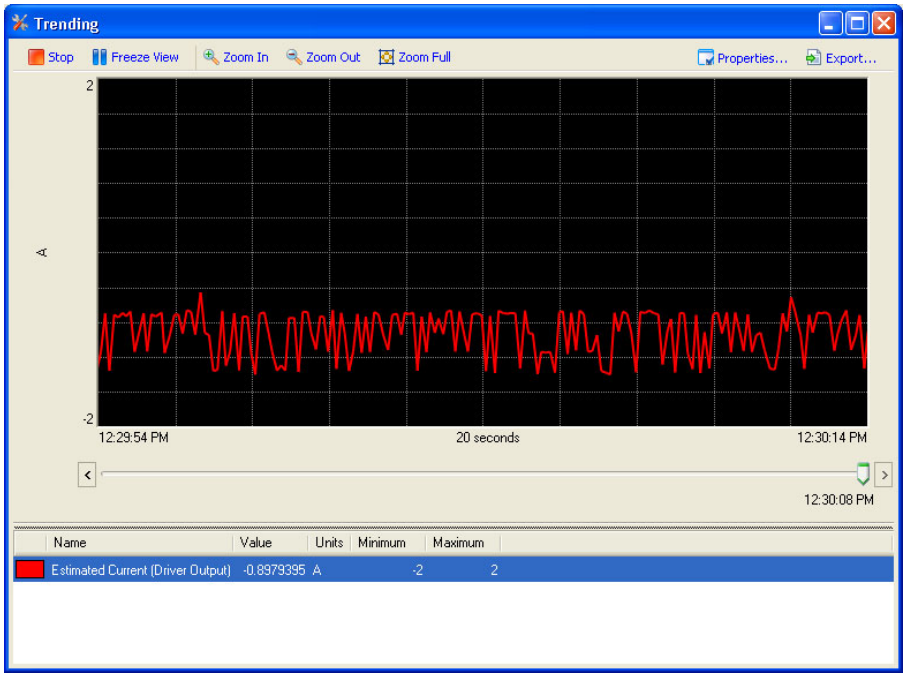

Figure 6-17. Custom Trend Example

The properties default range is automatic, and the time span is 20 sec. Use the properties button to make any desired changes. Additional values can be added to this trend as desired by right-clicking other values. Custom trend values can be exported to a file. Zoom in, zoom out, and zoom full change the displayed time window while keeping the same data scaling.

Actuator Travel / Setup Screen

To setup and view the actuator stops settings, go to the Actuator Travel/Setup screen.

WARNING

An improperly calibrated control could cause an overspeed or other damage to the prime mover. To prevent possible serious injury from an overspeeding prime mover, read and follow this entire procedure before starting the prime mover.

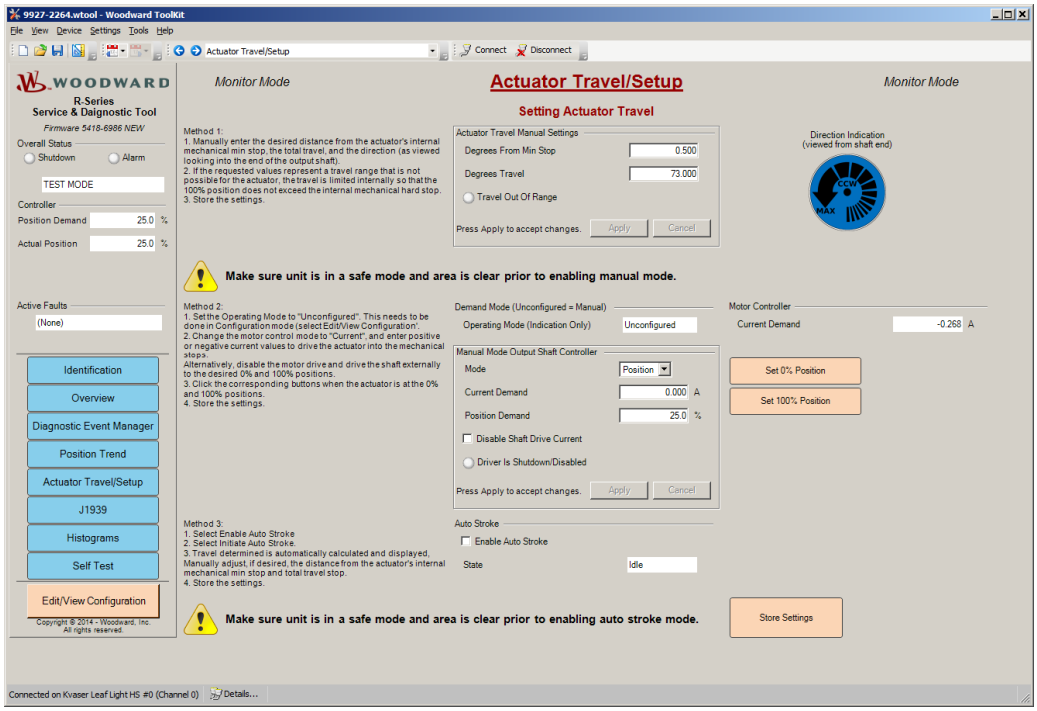

Figure 6-18. Actuator Travel/Setup Screen

Actuator Travel Setup

There are 3 basic methods provided to set the actuator travel.

1) Predetermined values. Directly set the min stop offset and overall travel.
2) Manual. Using manual modes, move the output to the desired position to identify the desired end stop position.
3) Automatic. Use auto stroke function to determine end stop locations.

WARNING

Make sure unit is in a safe mode and area is clear prior to setting actuator travel. Failure to comply with this recommendation can cause personal injury and/or property damage.

NOTICE

Do not install any external mechanical stops inside the actuator's range of travel without properly modifying the actuator travel settings. This could cause damage to the actuator's gearing or to the end device because the impact velocity is not adjusted inside the actuator's hard stops.

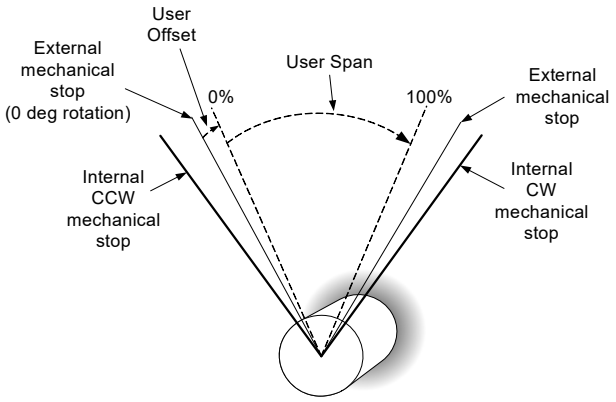

Figure 6-19a. Stops Setup for CW Operation

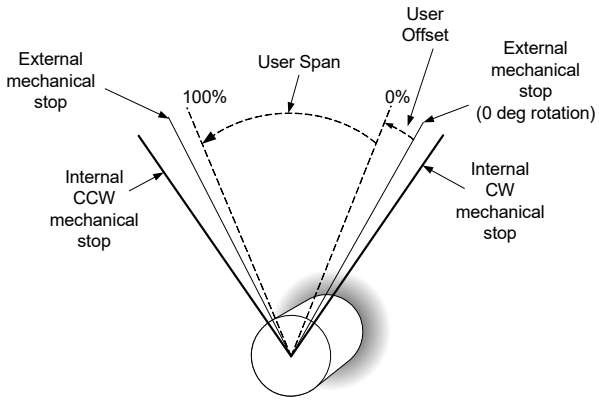

Figure 6-19b. Stops Setup for CCW Operation

IMPORTANT

It is highly recommended that the minimum fuel position setting stop the engine. This is essential for any configured shutdowns in the R-Series control to be directly effective. If this is not possible, the discrete output should be configured to actuate an external shutdown device.

Actual Position Feedback
The Actual Position is displayed in percent in the dashboard common area (left side of screen).

Set Travel Using Predetermined Values

This method sets the travel using a provided offset and span.

Steps:
1) Set degrees from min stop.
2) Set degrees travel.
3) Select Apply to accept changes.
4) Verify Travel Out Of Range LED is not red. This LED is red if a span is entered that would cause the actuator to try to move beyond the calibrated mechanical stop.
5) To save the modified values in the control, click the Store Settings button.

Degrees from Min Stop
Sets the actuator min position offset, in degrees from the min stop. Adjustable range: 0–90°.

Degrees Travel
Sets the degrees of rotation. If a span is entered that would cause the actuator to try to move beyond the mechanical stop, the travel value is automatically limited to keep the 0 to 100% stroke range within the mechanical stops. Adjustable range: 0-95°.

NOTICE

The R-11 and R-30 Series travel is nominally 73 ± 2°. The R-120 Series travel is nominally 93 ± 2°. If position setup values are entered that would cause the actuator to try to move beyond the mechanical stop, the values are automatically limited to keep the 0 to 100% stroke range within the mechanical stops.

Travel Out of Range Indication
Indication, when red, that the travel settings exceed available travel. The available travel is factory calibrated and may vary from unit to unit but has a nominal range of 71-75° for the R-11 or R-30 series or 91-95° for the R-120 series. The degrees from min stop plus the degrees travel result in the overall travel. It is advised to correct the settings; however the unit will function with this indication active but overall travel will be limited internally to the available travel.

Shaft Direction Indication

- **CW**– indicates the actuator rotation as clockwise for opening (increasing position demand).
- **CCW**– indicates the actuator rotation as counterclockwise for opening (increasing position demand).

Changes to shaft direction must be made in the Configuration mode, see Chapter 7 for details.

IMPORTANT

Actuator rotation is determined while looking into the actuator shaft end:

Clockwise

Counterclockwise

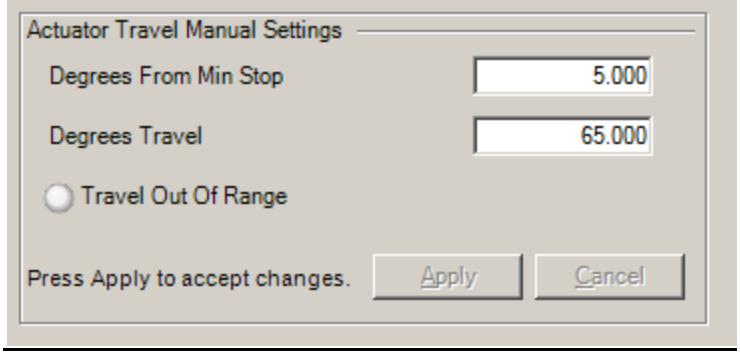

Figure 6-20. Predetermined Values Travel/Setup

Set Actual Positions Using Manual Modes

This method is used to have the position of the end stops defined manually, by positioning the device at the stop and telling the device it is at the stop.

Manual Mode Output Shaft Controller section

Mode

Selection of either manual position mode of manual current mode. This selected mode will be active when the operating mode is set to Unconfigured. When in manual current mode, the shaft drive output will be set to control current at the ‘Current Demand’ value. Similarly in manual position mode, the shaft drive output will be set to control position at the ‘Position Demand’ value.

Current Demand

Sets the coil current when the manual current mode is active. Allow range is
–16 A to 16 A

Position Demand

Sets the commanded position when the manual position mode is active. Allow range is 0 to 100%

Disable Shaft Drive Current

When selected, disables off the drive current to the actuator shaft

Driver is Disabled/Shutdown LED

When red, indicates the ‘Disable Shaft Drive Current’ is active.

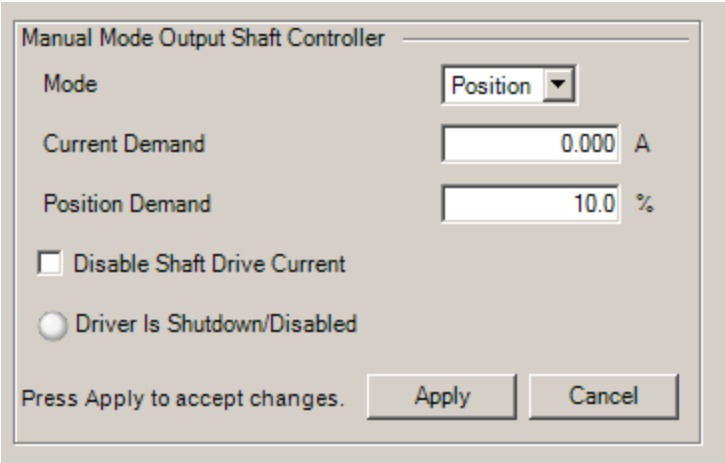

Figure 6-21. Manual Modes Travel/Setup

Manual Mode Instructions

Manual position control and manual current control modes are provided on the actuator travel/setup screen to facilitate setting and testing the actuator travel, linkage or valve setup. For safety purposes, manual modes can only be activated when the device operating mode is set to Unconfigured.

These steps re-calculate the predetermined travel settings (degrees from min stop and degrees travel).

1) Change operating mode configuration of the primary position command source to Unconfigured. Steps to do this are:
   a. Select the 'Edit/View Configuration' button, which opens the configuration window.
   b. Then select the General Setup page.
   c. Modify the Primary Demand Source to Unconfigured.
   d. Select OK, which applies the change and closes the configuration window.

2) Position the output at min. This can be done using current mode or by positioning externally.
   a. Using current mode: set Mode to Current then set the Current Demand to a value that forces the output to the desired position (e.g., 5 A or –5 A). Note the position commanded using current is rate limited to prevent slamming into the stops. Press Apply to accept the changes, selecting Cancel will revert values back.
   b. External positioning. Using this option, the shaft/valve output is positioned external to the R-Series. To facilitate this, select the 'Disable Shaft Current Drive' checkbox and press Apply to accept the change. The Drive is Shutdown/Disabled will turn red to indicate the mode is active.
   c. Hint: monitor the actual position value indicated in the common area on the left-hand side of the screen to ensure relative min or max position.
3) Set min position by selecting the Set 0% Position button.
4) Position the output at max.
5) Set max position by selecting the Set 100% Position button.
6) Sanity check values by viewing the values set. Note that the pushbuttons determine the min stop offset and travel settings in the Actuator Travel Manual Settings section. Ensure the Travel Out Of Range LED is not red.
7) Save the settings by selecting the Store Settings button.
8) When completed with manual modes, change the operating mode back to the value prior to testing by following the steps listed in 1) above.

Once completed, the calibration can be verified by using manual position mode.

WARNING **Entering manual modes and/or changing modes may change the state of device outputs. Stay clear of the actuator output shaft and all attachments. Failure to comply with this recommendation can cause personal injury and/or property damage.**

Set Actual Positions Using Auto Stroke Mode

This method is used to have the control automatically find the mechanical stop position settings (whether internal or external to the actuator).

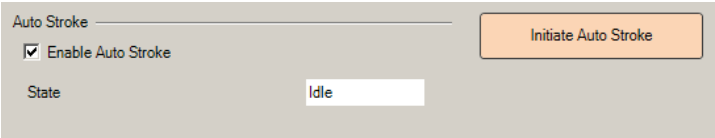

Figure 6-22. Auto Stroke Travel/Setup

These steps re-calculate the predetermined travel settings (degrees from min stop and degrees travel).

1) Select Enable Auto Stroke. This will allow visibility of the initiate button.
2) Select the Initiate Auto Stroke button. The auto stroke state provides feedback of the sequencing progress.
3) When complete, sanity check the values in the Actuator Travel Manual Settings section. Note that this function automatically determines the min stop offset and travel settings. Ensure the Travel Out Of Range LED is not red.
4) Save the settings by selecting the Store Settings button.

Once completed, the calibration can be verified by using manual position mode.

WARNING **Stay clear of the actuator output shaft and all attachments as sudden movement can occur at any time. Failure to comply with this recommendation can cause personal injury and/or property damage.**

CAN Indications and Troubleshooting Screen

This screen provides CAN status, either J1939 or CANopen. Note that CANopen is not available in firmware 5418-6986.

J1939

If a configuration error is determined in the J1939 settings, it indicates which unit is mis-configured. When detected, a button to the on-line configuration screen is provided to facilitate a convenient method to fix and confirm the configuration issue.

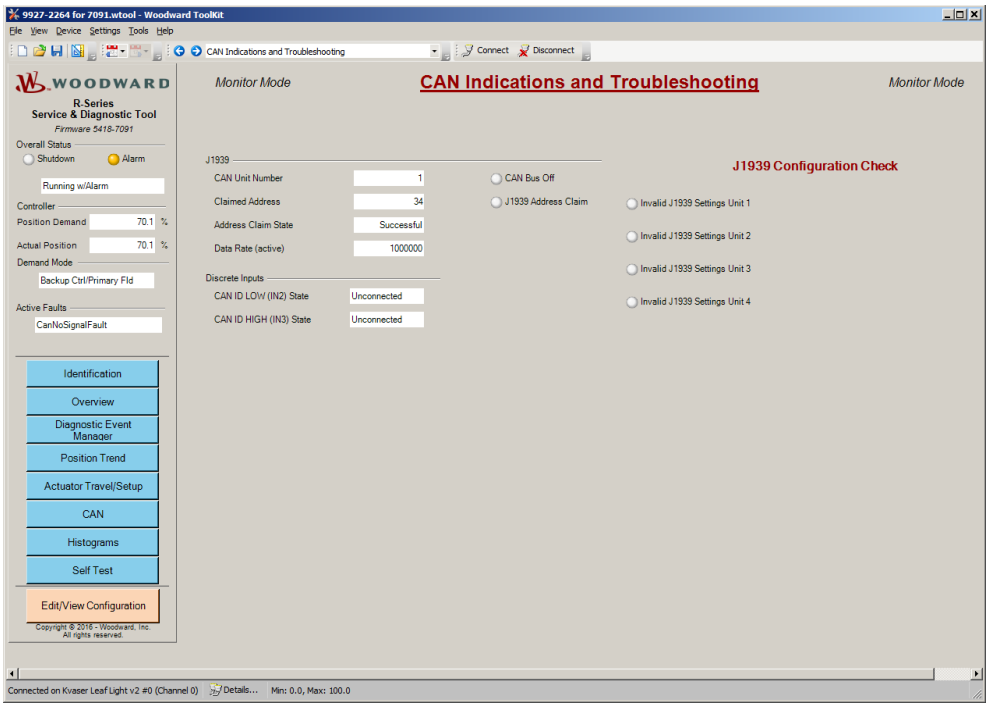

Figure 6-23a. J1939 Screen

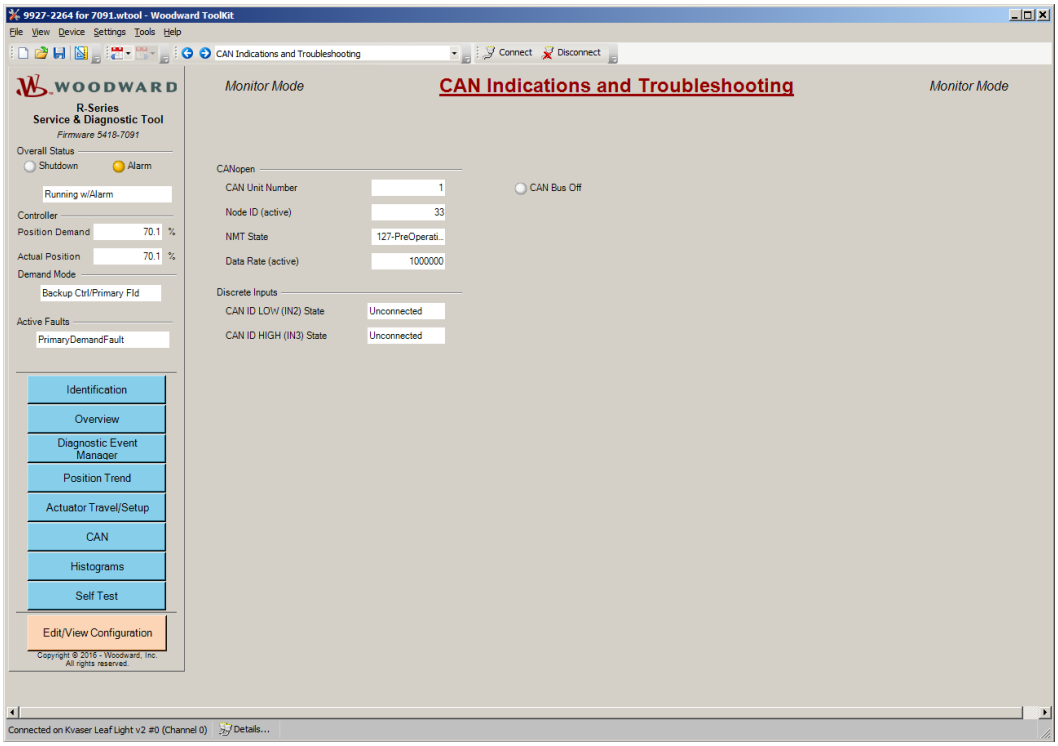

Figure 6-23b. CANopen Screen

CAN Unit Number
Displayed value of the active CAN Unit number (1-4) based on the CAN ID Low and High Discrete inputs.

Source Address *(J1939 only)*
Displayed value of the last successfully claimed CAN source address, may be different from configured source address if dynamic addressing is enabled.

Node ID (active) *(CANopen only)*
Displayed value of the active CANopen node ID.

Address Claim State *(J1939 only)*
Indicates the status of the address claim function.

NMT State *(CANopen only)*
Indicates the status of the NMT state machine.

Data Rate (active)
Displayed value of the "active" J1939 data rate. This may vary from the configured rate since changes to the J1939 data rate are made in the configuration mode (see Chapter 7) and require a power cycle.

CAN Bus Off LED
When red, indicates a bus off condition is detected.

J1939 Address Claim LED *(J1939 only)*
When red, indicates a failure in the J1939 address claiming.

Discrete Input – CAN ID LOW (in2) State
Indicates the status of discrete input 2 CAN ID Low input (Low, High, Unconnected). The combination of CAN ID Low and CAN ID High on power up determine the selected CAN Unit Number. See Chapter 3 for details.

Discrete Input – CAN ID HIGH (in3) State
Indicates the status of discrete input 3 CAN ID High input (Low, High, Unconnected). The combination of CAN ID Low and CAN ID High on power up determine the selected CAN Unit Number. See Chapter 3 for details.

Invalid J1939 Settings Unit 1-4 LED *(J1939 only)*
When red, indicates an error in the J1939 settings is detected for that unit. When detected, a screen selection button appears, allowing on-line viewing and correction of the issue.

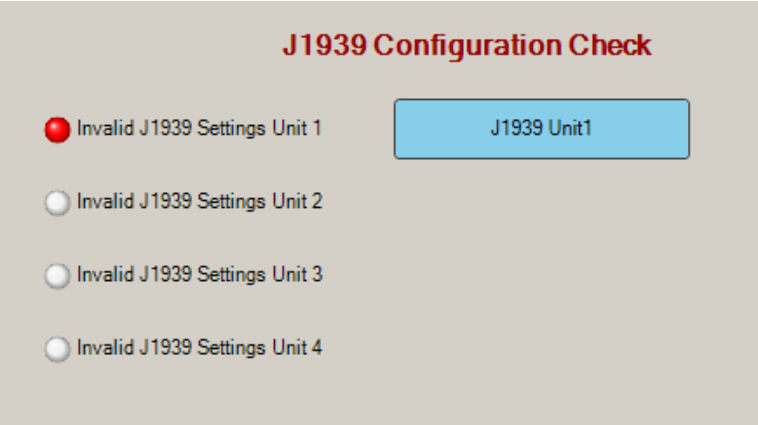

Figure 6-24. J1939 Configuration Check

J1939 On-Line Configuration Screen

This screen is provided to facilitate correction of settings determined as incorrect. These screens (unit 1, 2, 3, 4) only appear when invalid settings are detected. For details on each setting, see Chapter 7.

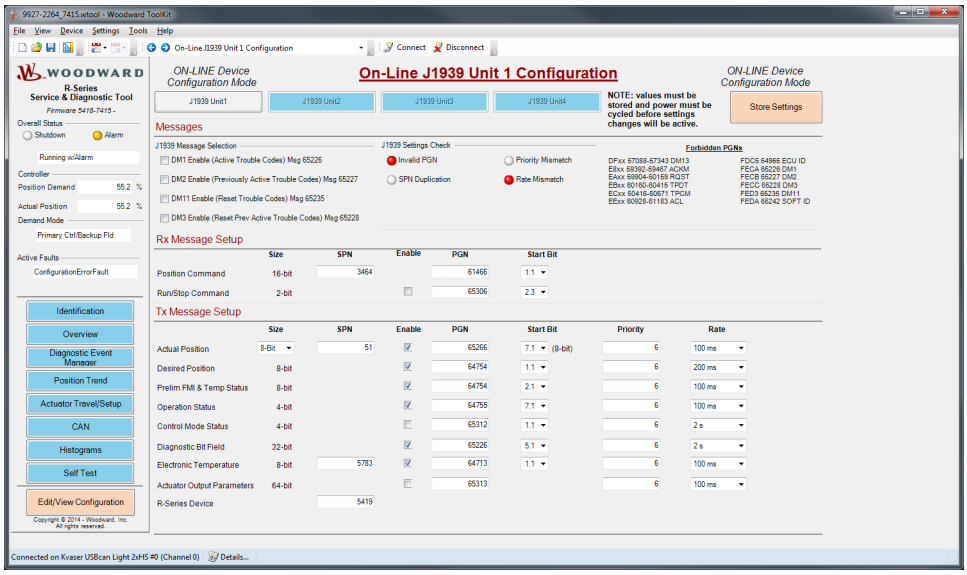

Figure 6-25. On-Line J1939 Configuration Screen

Invalid PGN LED

When red, indicates a reserved PGN has been configured. The reserved PGNs are listed on the screen and are not allowed as they have a dedicated predefined J1939 function. See also Reserved PGN Listing in Chapter 7.

SPN Duplication LED

When red, indicates non-unique SPNs have been configured. Within each CAN unit (1-4), all SPN values must be unique.

Priority Mismatch LED

When red, indicates a priority value mismatch is detected. The priority settings within any PGN must be the same.

Rate Mismatch LED

When red, indicates a transmit rate value mismatch is detected. The rate settings within any PGN must be the same.

Histograms Screen

The Histograms screen displays two histograms, one for position demand and another for motor current vs. electronics temperature. These are provided for historical operation purposes only. The position demand, temperature, and filtered motor current are sampled once per second. Each data element represents seconds within the range. Histogram data is saved at 30 minute intervals and when the keyswitch is opened.

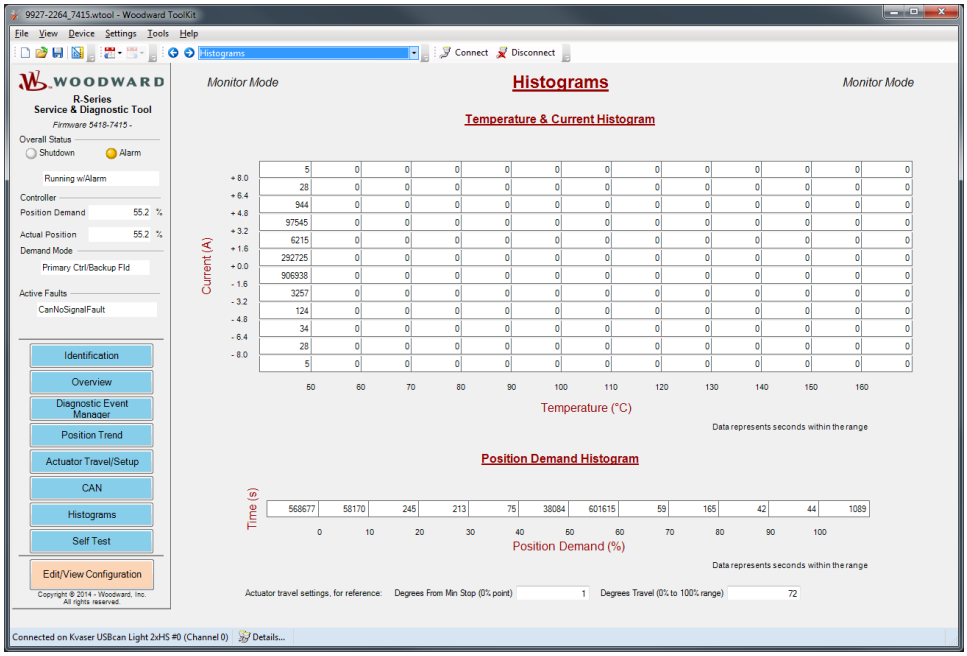

Figure 6-26. Histogram Screen

Self-Test Screen

The Self Test screen facilitates running and monitoring of the device's self-test.

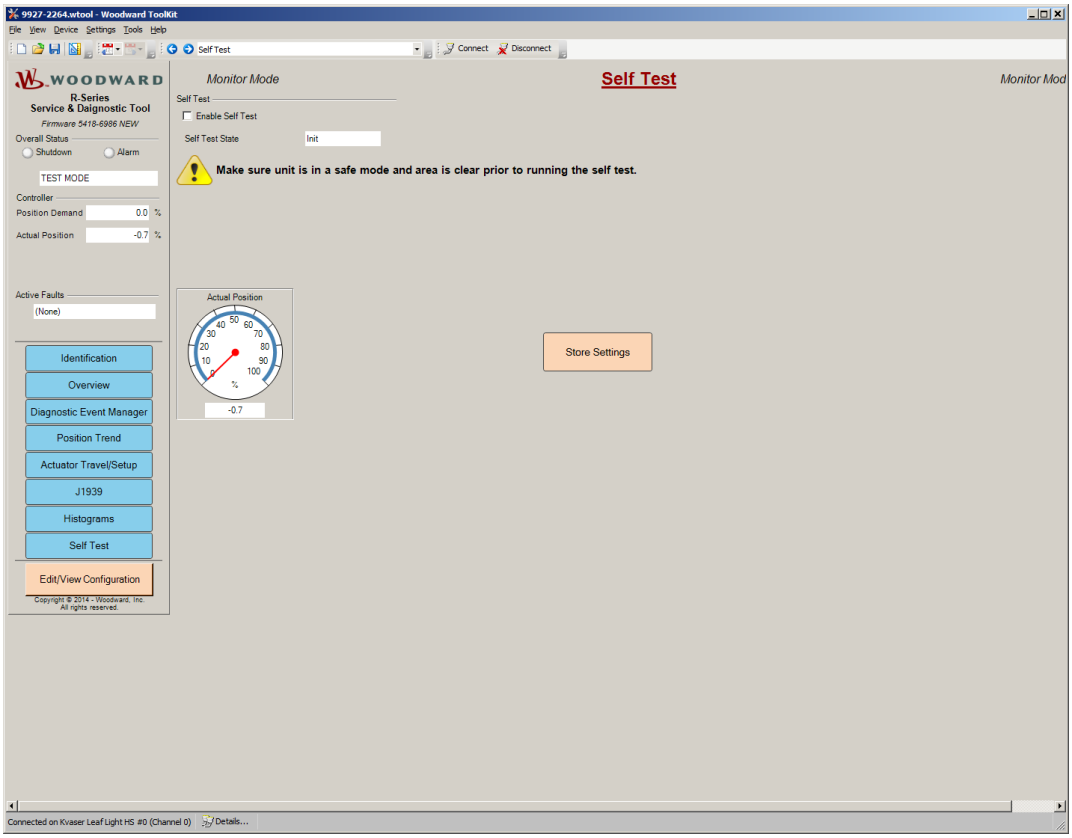

Figure 6-27. Self-Test Screen

WARNING **Enabling the self-test will change the state of device outputs. Make sure unit is in a safe state prior to running the self-test. Stay clear of the actuator output shaft and all attachments. Failure to comply with this recommendation can cause personal injury and/or property damage.**

Self-Test

The self-test executes a set of internal functions, determines performance values and then compares these results internally for pass/fail criteria. Results can be stored internally, in nonvolatile memory for future reference and historical comparison. Twelve historical results are stored as well as three baseline values (actuator, valve assembly, and as-installed). The data stored include an overall test pass/fail, all the self-test data, test time (run time of the test), and test conditions (device temperature and input voltage).

The self-test will execute when commanded and all criteria are met. A test status indication shows test progress and, when completed, values are compared against test limits. An overall pass/fail is provided as well as individual pass/fail indications.

After the self-test is completed/run, several options are available.

- copy the data into the historical results array
- store the data into the initial install baseline array
- ignore the results (no save/store commands)
- copy the data into the historical results and the baseline results (2 commands)

If the test is run again without a save/store commanded, the previous test data will be lost. Data is saved into nonvolatile memory with a Store Settings command or keyswitch off.

After the self-test is completed/run, the data values can be set into the 'initial install' baseline array. The results can be visually compared against previous stored values, including the factory-stored baseline values.

After the self-test is completed/run, the data values can be copied into the historical data array with a command. The last 12 saved test results are provided as an array of values for each test result, plus some test info including the time, the input voltage, and the internal temperature. An index variable is provided to indicate the last element written (most recent values) within the array.

The Service Tool provides a complete self-test interface including commands, data, limits, and historical data. A selection is provided to show/hide the historical data on the Service Tool.

The self-test overall pass/fail status has no effect on the device's operation or functions (e.g. no alarm or shutdown or diagnostic event). The self-test is completely independent and provided for information only.

Tests

Step tests for overshoot and undershoot.
Step tests for rise time and fall time.
Position ramp tests for excessive friction/binding, spring force.
Bandwidth tests.
Gearbox stiffness and backlash tests.

How to run the test:

1) Set input voltage to 24VDC.
2) Enable the self-test by selecting the Enable Self-test checkbox.
3) Start the self-test by selecting the 'Initiate Self-test' button.
4) Monitor the self-test state, which indicates the status progress. The test takes approximately 30 seconds. When 'Complete', the overall test pass/fail can be read. An enumeration is available to display the result, either no issues or an indication of the first detected failure.
5) Optionally assign/set the current test results data into the historical data array by selecting the 'Copy Self-test Data to Historical array' pushbutton.
6) Repeat steps 3-5, if desired.
7) Remove the Test Enable by de-selecting the Enable Self-test checkbox.
8) Save data into nonvolatile memory by selecting the 'Store Settings' pushbutton. If this is the initial installation self-test run, optionally the results can be stored into the baseline value array. This is done by selecting the 'Save Initial Install Data' pushbutton (see Self-test Log page).

NOTES:

- Prior to running self-test, the input voltage should be set to 24V. If not, rise time and fall time values could fail. Rise and fall times are only guaranteed at or above 24VDC. The test will run over any input range; however, failures may occur.

- Prior to running self-test, test limit values are expected to be set to appropriate values. These will depend on the device, whether it's an actuator vs valve - plus each valve type/size/application may have different limits. See Self-test Setup in Chapter 7 for self-test limit settings.

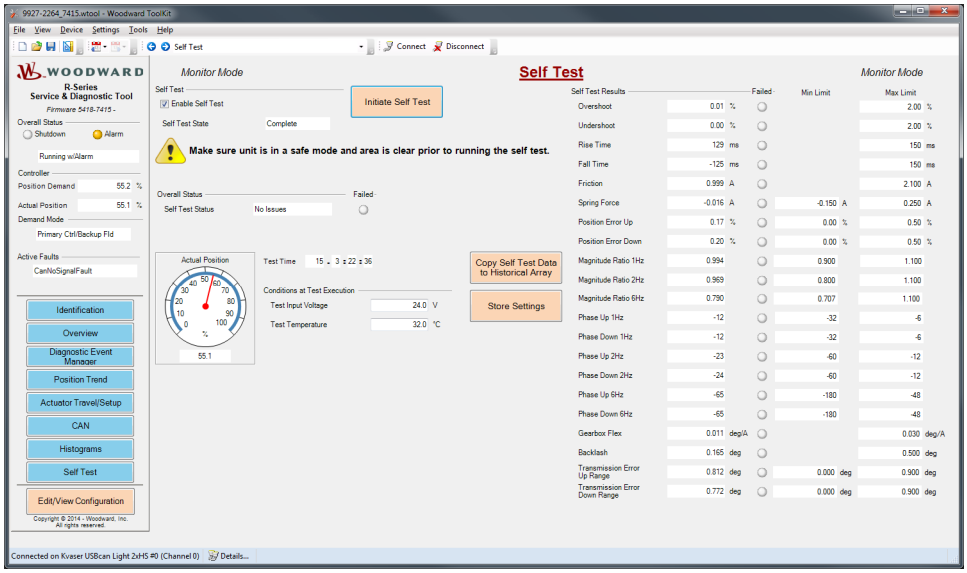

Figure 6-28. Self-Test Results

Test Details

Position Step Tests:
The position demand is stepped from 0% to 100% and back to 0%. The rise time from 10% to 90% is measured and the position overshoot (beyond 100%) is captured. Likewise the fall time from 90% to 10% is measured and position undershoot (below 0%) is captured.

Position Ramp Tests:
These tests are performed to check for excessive friction/binding and to determine the spring force. The position demand is ramped from 0% to 100% and then back to 0%. During this test the current and position following error (setpoint-actual) and transmission error (motor-shaft positions) in both the up and down directions are monitored and captured. The current is accumulated from 10 to 90%. The average drive current in each direction is used to determine the spring force and friction. Transmission error in each direction is monitored between 10 to 90%, capturing min and max (providing a range). The maximum position following error between 5 to 95% is captured in each direction.

Gearbox Backlash:
Backlash is calculated based on the transmission error in each direction.

Bandwidth Tests:
The bandwidth test provides a position demand of 50% with a +/- 2% sine. Measures the performance at three different sine frequencies, 1Hz, 2Hz and 6Hz. Three measurements are calculated at each frequency to indicate performance: phase lag in the up direction, phase lag in the down direction, and magnitude ratio.

Flex (stiffness/torsional rigidity) Test:
The gearbox flex is determined at min and at max stop positions using current control of 4.5A and 9A. The larger of the two measurements is compared to test limits. If the shaft has deflection (soft stops), then the shaft position changes should be included in the overall results. The shaft positon sensor is a noisier signal and must be filtered. An adjustment on the low pass filter gain is provided if needed. Note that the R-Series actuator and Woodward valves do not have soft stops: this feature is provided for external customers.

Self-Test Page Data

Self-Test Section

Enable Self-test
When selected, allows self-test to be run.

Self-test State
Indicates the current self-test state. Message options include: 'Init', 'JumpUp', 'JumpDn', 'RampUp', 'RampDn', 'Bandwidth1Hz', 'Bandwidth2Hz', 'Bandwidth6Hz', 'Stiffness', 'Complete', 'Aborted'.

Actual Position
Provides a visual indication of the actual shaft position.

Test Time (days, hours, minutes, seconds)
These four values indicate the test time for the array data set.

Test Temperature
Indicates the internal device temperature, in ° C, at the time of the test.

Test Input Voltage
Indicates the input (supply) voltage, in volts, at the time of the test.

IMPORTANT **The self-test function is provided to monitor and evaluate performance over time. A self-test failure does not necessarily indicate a problem with the device.**

Pushbutton Commands

Initiate Self-test
When selected, starts the self-test. Displays 'Running Self-test' when the test is currently performing the test sequence. This button is only displayed when Enable Self-test is selected.

Copy Self-test Data to Historical Array
Selecting this pushbutton sets the displayed test results data into the historical data array, which is displayed on the Self-test Log page. Re-running the self-test will overwrite the test results. Selecting this option will retain a copy. Only the last 12 results can be retained in the historical array.

Store Settings
When selected, all data is stored into nonvolatile memory.

IMPORTANT **Data will be lost if not stored into non-volatile memory. Data can be saved into nonvolatile memory by either selecting the 'Store Settings' pushbutton or by opening the keyswitch.**

Overall Status Section

Self-test Status
Self-test status provides an indication of the self-test results, either no issues or an indication of the first failure detected (only one failure can be indicated at a time). Message options include: 'No Issues', 'Rise Time failed', 'Fall Time failed', 'Overshoot failed', 'Undershoot failed', 'Friction failed', 'Spring Force failed', 'PosErrUp failed', 'PosErrDn failed', 'PhaseErrUp failed', 'PhaseErrDn failed', 'MagRatio failed'

Overall Test Failed LED
When off indicates all tests passed. When on indicates at least one test failed.

Multiple failures may indicate input voltage out of range, excessive friction or binding, valve contamination, a gearbox issue (broken gear tooth), or an internal failure of actuator (shaft break, sensor magnet lost). Individual results are described below.

Self-Test Results Section

Overshoot
Max position overshoot detected above 100%, in percentage, on a 100-0% position step.

Undershoot
Min position overshoot detected below 0%, in percentage, on a 100-0% position step.

Overshoot Failed LED, Undershoot Failed LED
Indicates test result exceeds test limits. Could indicate incorrectly set limits. Out of tolerance likely due to poor voltage regulation/wiring, friction, return spring or position feedback problems. Spring forces will affect results.

Rise Time
The slew time from 10% to 90% position, in milliseconds, on a 0-100% position step.

Fall Time
The slew time from 90% to 10% position, in milliseconds, on a 100-0% position step.

Rise Time Failed LED, Fall Time Failed LED
Indicates test result exceeds test limits. Could indicate incorrectly set limits. Slow is likely due to high friction, low supply voltage, or high actuator torque constant. Fast is likely due to low high actuator torque constant or high supply voltage. Presence/absence of return spring, temperature, and actuator loading can also affect slew times.

Friction
Amount of friction based on the average current to drive the shaft open/closed and accounting for spring force.

Friction Failed LED
Indicates test result exceeds test limits. Could indicate incorrectly set limits. Out of tolerance could be caused by valve contamination/build-up, mis-assembly, poor mechanical alignment, binding, or rubbing.

Spring Force
Amount of spring force determined, in amps, based on the average current to drive the shaft open/closed. A positive value indicates a spring force in the closed direction.

Spring Force Failed LED
Indicates test result exceeds test limits. Could indicate incorrectly set limits. Out of tolerance is likely due to incorrectly installed spring, incorrect presence or absence of return spring. Imbalanced shaft weight/load/force will be detected as a spring force.

Position Error Up
The position error is the difference between the commanded position and the actual position. During the position ramp, between 5% and 95%, the maximum and minimum error values are captured. This value indicates this position error range (max-min) detected while ramping position, in percent.

Position Error Down
The position error range (max-min) detected while ramping from 95% to 5% position, in percent.

Position Error Up or Down Failed LED
Indicates test result exceeds test limits. Could indicate incorrectly set limits. Excessive position error could be caused by a high friction point, see conditions for friction failed.

Transmission Error Up Range
The transmission error is the difference between the actual shaft position and the motor position. The range is the difference between the maximum and minimum transmission error values captured while ramping from 10% to 90%, in degrees.

Transmission Error Down Range
The transmission error is the difference between the actual shaft position and the motor position. The range is the difference between the maximum and minimum transmission error values captured while ramping from 90% to 10%, in degrees.

Transmission Error Up or Down Range Failed LED
Indicates test result exceeds test limits. Could indicate incorrectly set limits. Excessive transmission range could be caused by a gearbox issue (breakage, bad/missing tooth, bearings) or an internal failure of actuator (shaft break, sensor magnet lost).

Backlash
Amount of backlash, in degrees, determined from the average transmission error (motor-shaft positions) in both the up and down directions.

Backlash Failed LED
Indicates test result exceeds test limits. Could indicate incorrectly set limits. Out of tolerance could be caused by excessive gearbox wear or bearing slop. Spring force will lower backlash results (compared to bare shaft).

Gearbox Flex
The amount of gearbox flex, in degrees per amp, is determined by comparing the amount of position sensor movement when driving into the stop at varying current levels.

Gearbox Flex Failed LED
Indicates test result exceeds test limits. Could indicate incorrectly set limits. Out of tolerance could be caused by a shaft position movement during test, bearing slop, gearbox wear. Shaft position movement could be caused by compliant stops, excessive friction, excessive spring load, noisy sensor, incorrectly set sensor noise filter.

Magnitude Ratio 1Hz, 2Hz, 6Hz
Part of the bandwidth check, the ratio of the position setpoint to the actual position for the specified frequency test.

Magnitude Ratio Failed LED (1Hz, 2Hz, 6Hz)
Indicates test result exceeds test limits. Could indicate incorrectly set limits. Out of tolerance could be caused by excessive friction or high load inertia.

Phase Up 1Hz, 2Hz, 6Hz
Phase degrees at -6dB for the specified frequency test, in the increasing (up) position direction.

Phase Down 1Hz, 2Hz, 6Hz
Phase degrees at -6dB for the specified frequency test, in the decreasing (down) position direction.

Phase Up or Down Failed LED (1Hz, 2Hz, 6Hz)
Indicates test result exceeds test limits. Could indicate incorrectly set limits. Out of tolerance could be caused by excessive friction or high load inertia.

Self-Test Log Screen

The Self-Test Log screen displays the historical and baseline self-test data.

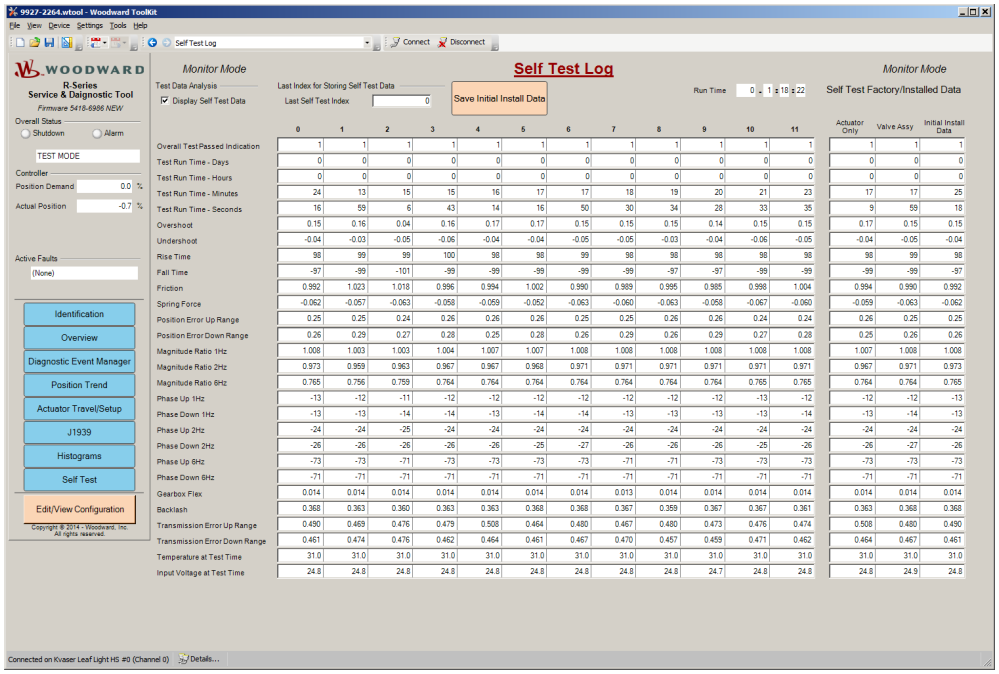

	0	1	2	3	4	5	6	7	8	9	10	11	Actuator Only	Valve Assy	Initial Install Data
Overall Test Passed Indication	1	1	1	1	1	1	1	1	1	1	1	1	1	1	1
Test Run Time - Days	0	0	0	0	0	0	0	0	0	0	0	0	0	0	0
Test Run Time - Hours	0	0	0	0	0	0	0	0	0	0	0	0	0	0	0
Test Run Time - Minutes	24	13	15	15	16	17	17	18	19	20	21	23	17	17	25
Test Run Time - Seconds	16	59	6	43	14	16	50	30	34	28	33	35	9	59	18
Overshoot	0.15	0.16	0.04	0.16	0.17	0.17	0.15	0.15	0.15	0.14	0.15	0.15	0.17	0.15	0.15
Undershoot	-0.04	-0.03	-0.05	-0.06	-0.04	-0.04	-0.05	-0.05	-0.03	-0.04	-0.06	-0.05	-0.04	-0.05	-0.04
Rise Time	98	99	99	100	98	98	99	98	98	98	98	98	98	99	98
Fall Time	-97	-99	-101	-99	-99	-99	-99	-99	-97	-97	-99	-99	-99	-99	-97
Friction	0.992	1.023	1.018	0.996	0.994	1.002	0.990	0.989	0.995	0.985	0.998	1.004	0.994	0.990	0.992
Spring Force	-0.062	-0.057	-0.063	-0.058	-0.059	-0.052	-0.063	-0.060	-0.063	-0.058	-0.067	-0.060	-0.059	-0.063	-0.062
Position Error Up Range	0.25	0.25	0.24	0.26	0.26	0.26	0.25	0.25	0.26	0.26	0.24	0.24	0.26	0.25	0.25
Position Error Down Range	0.26	0.29	0.27	0.28	0.25	0.28	0.26	0.29	0.26	0.29	0.27	0.28	0.25	0.26	0.26
Magnitude Ratio 1Hz	1.008	1.003	1.003	1.004	1.007	1.007	1.008	1.008	1.008	1.008	1.008	1.008	1.007	1.008	1.008
Magnitude Ratio 2Hz	0.973	0.959	0.963	0.967	0.967	0.968	0.971	0.971	0.971	0.971	0.971	0.971	0.967	0.971	0.973
Magnitude Ratio 6Hz	0.765	0.756	0.759	0.764	0.764	0.764	0.764	0.764	0.764	0.764	0.765	0.765	0.764	0.764	0.765
Phase Up 1Hz	-13	-12	-11	-12	-12	-12	-12	-12	-12	-12	-13	-12	-12	-12	-13
Phase Down 1Hz	-13	-13	-14	-14	-13	-14	-14	-13	-13	-13	-13	-14	-13	-14	-13
Phase Up 2Hz	-24	-24	-25	-24	-24	-24	-24	-24	-24	-24	-24	-24	-24	-24	-24
Phase Down 2Hz	-26	-26	-26	-26	-26	-25	-27	-26	-26	-26	-25	-26	-26	-27	-26
Phase Up 6Hz	-73	-73	-71	-73	-73	-73	-73	-71	-71	-73	-73	-73	-73	-73	-73
Phase Down 6Hz	-71	-71	-71	-71	-71	-71	-71	-71	-71	-71	-71	-71	-71	-71	-71
Gearbox Flex	0.014	0.014	0.014	0.014	0.014	0.014	0.014	0.013	0.014	0.014	0.014	0.014	0.014	0.014	0.014
Backlash	0.368	0.363	0.360	0.363	0.363	0.368	0.368	0.367	0.359	0.367	0.367	0.361	0.363	0.368	0.368
Transmission Error Up Range	0.490	0.469	0.476	0.479	0.508	0.464	0.480	0.467	0.480	0.473	0.476	0.474	0.508	0.480	0.490
Transmission Error Down Range	0.461	0.474	0.476	0.462	0.464	0.461	0.467	0.470	0.457	0.459	0.471	0.462	0.464	0.467	0.461
Temperature at Test Time	31.0	31.0	31.0	31.0	31.0	31.0	31.0	31.0	31.0	31.0	31.0	31.0	31.0	31.0	31.0
Input Voltage at Test Time	24.8	24.8	24.8	24.8	24.8	24.8	24.8	24.8	24.8	24.7	24.8	24.8	24.8	24.9	24.8

Figure 6-29. Self-Test Screen

Self-Test Historical Data

The self-test historical data is stored in a 12-element array. The array is zero-based (0-11) and the data is displayed vertically with the index numbers listed at the top. The data stored includes all the test results listed above plus the test time and initial test conditions (voltage and temperature). An option is provided to hide/display the data. To set data into this array, the 'Copy Self-test Data to Historical Array' pushbutton is used (see Self-test page). A Store Settings command or keyswitch is required to permanently store all data into nonvolatile memory.

Display Self-test Data

Select this checkbox to display the historical results arrays. Uncheck to hide the results.

Last Self-test Index

This value indicates the array index of the last store command.

Overall Test Passed Indication

Indication if the test results passed all test criteria or not. A value of '1' indicates passed, '0' indicates failed.

Test Run Time (days, hours, minutes, seconds)

These four values indicate the test time for the array data set.

Temperature at test time (degC)

Indicates the internal device temperature, in °C, at the time of the test.

Input Voltage at test time (V)

Indicates the input (supply) voltage, in volts, at the time of the test.

IMPORTANT

Data will be lost if not stored into non-volatile memory. Data can be saved into nonvolatile memory by either selecting the 'Store Settings' pushbutton or by opening the keyswitch.

Chapter 7. Configuration

Overview

The R-Series control is configured using the Service Tool. Refer to Chapter 6 for Service Tool installation and connection instructions.

The R-Series control can be configured either on-line or off-line. On-line configuration can only be performed when the Service Tool is connected to the R-Series control. Off-line configuration can be done at any time. On-line and off-Line configuration settings do not take effect until they are loaded into the control.

This manual applies to the R-Series position control models with software 5418-6986 or newer. The software identification can be found using the Service Tool. It is displayed on the Identification screen (Software ID).

IMPORTANT **Many R-Series actuators are delivered pre-configured and calibrated with OEM specific settings. These units do not require the use of the Service Tool. However, the Service Tool is a valuable troubleshooting aid.**

WARNING **An unsafe condition could occur with improper use of these software tools. Only trained personnel should have access to these tools.**

OEM Configuration File Data

The OEM can save configuration file specific data with the Service Tool. A notes text field is provided on each configuration screen that can be used to store data for each configuration such as:

- Customer
- Engine Type
- Application Type
- Notes

Configuring the Unit—On-Line

Unit On-Line configuration is summarized as follows:

1. Connect to the R-Series using the associated Service Tool.
2. On the Overview page select the "Edit/View Configuration" button. Allow time for the PC Service Tool to download the parameter values (a second or two).
3. Navigate to the parameters using the buttons displayed on the screen and modify as needed.
4. Load the parameters to the device by selecting the "Apply" button located at the bottom right corner of the screen.

Configuring the Unit—Off-Line

Unit Off-Line configuration is summarized as follows:

1. Open a new or saved Settings File
2. Edit the configuration settings.
3. Do a 'Save' to keep the same configuration filename OR do a 'Save As' to create a new configuration file.
4. When convenient, connect to the R-Series control and load the configuration settings to the control.

IMPORTANT

New controls are supplied with a configuration. These configurations may consist of default settings or OEM specific settings. Creating a 'New Settings from SID Defaults' is not recommended. Modifying, saving and loading an existing configuration is preferred.

WARNING

Overspeed

The engine, turbine, or other type of prime mover should be equipped with an overspeed shutdown device to protect against runaway or damage to the prime mover with possible personal injury, loss of life, or property damage.

The overspeed shutdown device must be totally independent of the prime mover control system. An overtemperature or overpressure shutdown device may also be needed for safety, as appropriate.

Configuring the Unit using Edit/View Configuration Button

Pressing Edit/View Configuration Button when Service Tool is connected to the control opens Settings Editor with currently used settings. From this window, the user can monitor settings or modify them.

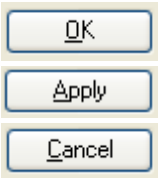

- to apply changes and exit editor

- to apply changes (no exit)

- to exit editor with no changes

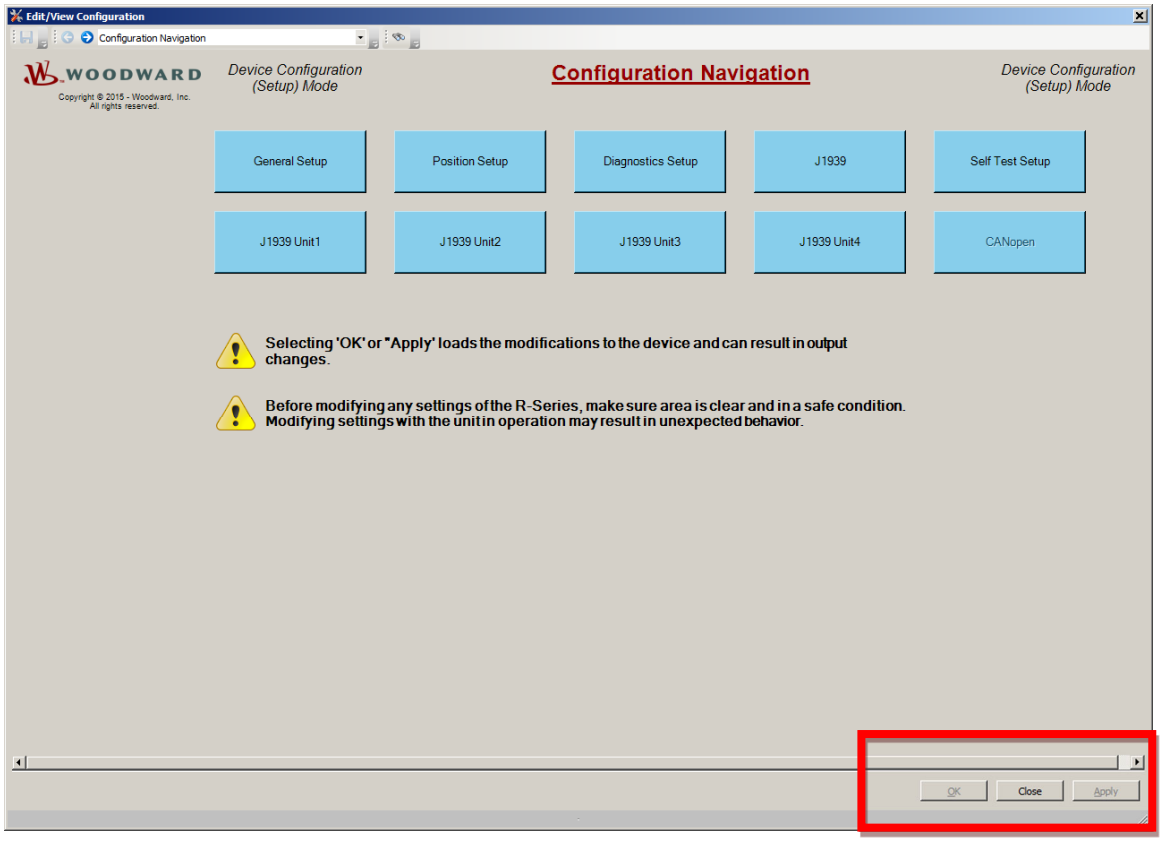

Figure 7-1. Configuration Navigation Screen

Creating a Configuration Settings File

The existing R-Series control configuration settings can be viewed by connecting the Service Tool to the control, reading the settings, saving the settings to a file then opening the saved file. For Service Tool instructions, see Chapter 5.

A settings file can be created on-line (connected to control) or off-line (not connected). To create a settings file using Service Tool default settings, click 'Settings' on the Service Tool menu bar then 'New from SID Specification Defaults'. To create a settings file based on the control's current values, click 'Settings' on the Service Tool menu bar then 'Save from Device to File'.

This starts a Save Setting Wizard to save the R-Series control settings to a configuration settings file. You will be prompted for a File name. These settings can be saved to an existing file or, by entering a new file name, to a new file.

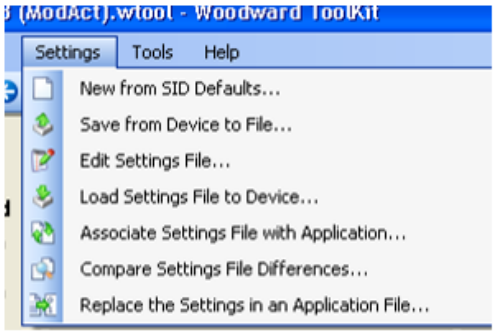

Figure 7-2. Settings Menu Options

Opening Configuration Settings Files

Settings Files can be opened to view configuration settings, edit settings, 'save' (or 'save as') settings and download settings to the control.

To open the Settings Files, click 'Settings' on the R-Series Service Tool menu bar then select 'Edit Settings File'. From the list of names, simply double click the desired file name. This opens a Settings Editor screen for viewing or editing the configuration settings.

Configuration Parameters

The settings editor screens are used to set the configuration parameters.

The following screens may be displayed. Screens, content, and available functionality vary with firmware version.

- Configuration Navigation
- General Setup
- Position Setup
- Diagnostics Setup
- CANopen Configuration
- J1939 General Configuration
- J1939 Unit1 Configuration
- J1939 Unit2 Configuration
- J1939 Unit3 Configuration
- J1939 Unit4 Configuration
- Self test Setup

Screen navigation can be performed using the on-screen left- and right-arrow icons, the screen drop-down, or by selecting the screen name pushbutton.

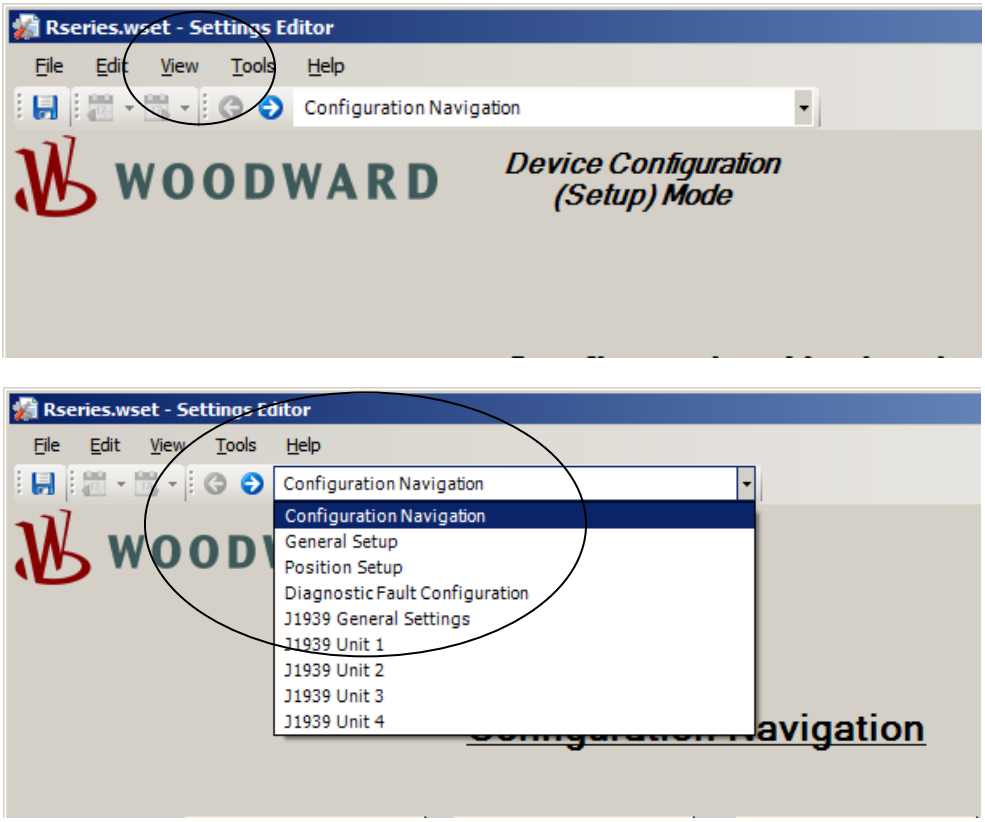

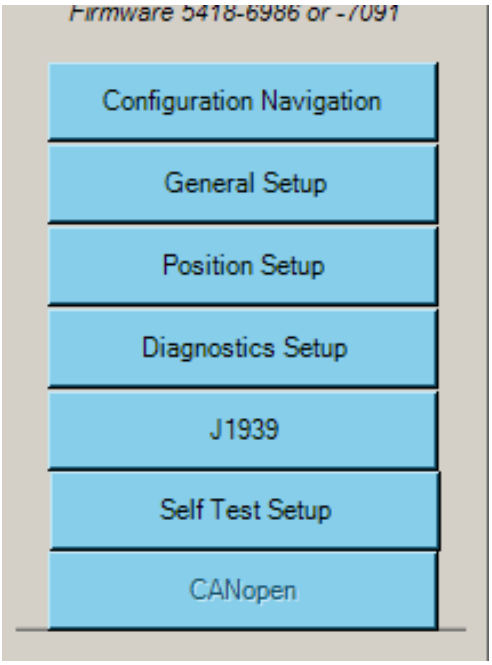

Figure 7-3. Screen Navigation Options

The tuning range of a selected parameter is displayed on the screen status bar. Attempts to enter values outside the parameter minimum and maximum range will not be accepted and an error message is displayed.

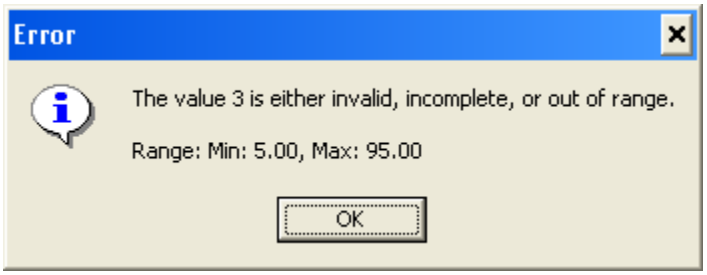

Figure 7-4. Setting Error Message

General Setup

The General Setup screen provides demand input setup, shutdown action, analog out and discrete out settings. Demand setup includes settings for selection, scaling, failure levels, and redundancy.

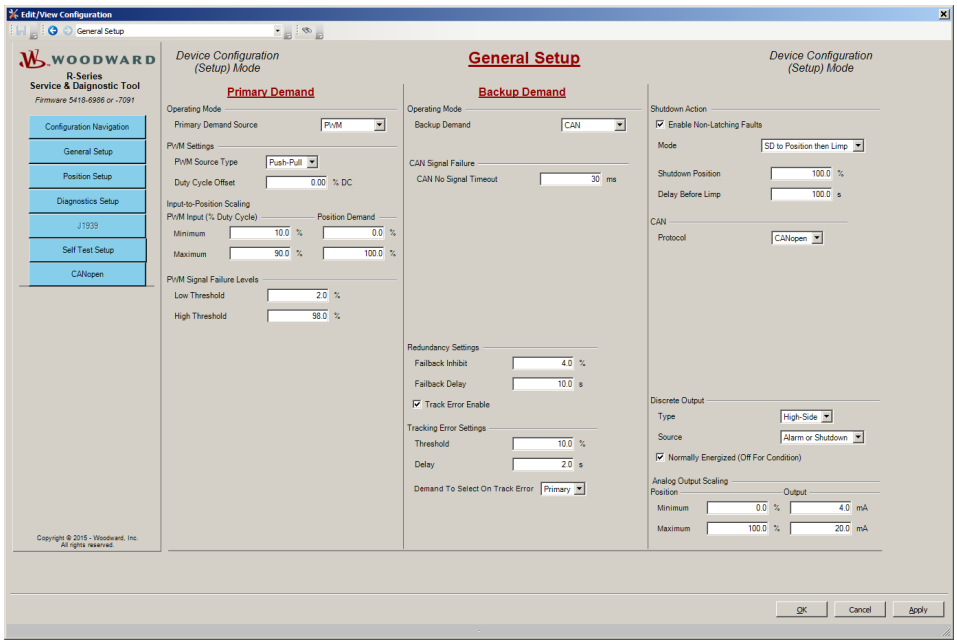

Figure 7-5. Configure General Setup

Operating Mode Section

Primary Demand Source

The Primary Position Demand input source can be set to one of the following:

Unconfigured	Removes operating mode to allow actuator travel calibration.
Analog	Selects an analog (20 mA or 200 mA) position demand input.
PWM	Selects a PWM position demand input.
CAN	Selects a CAN position demand input.

Allowed values: Unconfigured, Analog, PWM, CAN Default: Unconfigured

Backup Demand Source

The Backup Position Demand input source can be set to one of the following:

Unconfigured	Removes backup demand operation.
Analog	Selects an analog (20 mA or 200 mA) position demand input.
PWM	Selects a PWM position demand input.
CAN	Selects a CAN position demand input.

Allowed values: Unconfigured, Analog, PWM, CAN Default: Unconfigured

CAN Signal Failure Section – *(only displayed if CAN demand is used)*

CAN No Signal Timeout
Sets the maximum time between received CAN position messages for loss of CAN demand detection (either J1939 or CANopen, depending on configuration). If this time is exceeded twice consecutively, or if no messages are received for 4 times this value, a CAN No Signal fault occurs.
Adjustable range: 10 to 10000 ms, default 30.

PWM Input Section – *(only displayed if PWM demand is used)*

The PWM input screen provides settings for the PWM input scaling and fault thresholds.

PWM Settings Section

PWM Source Type
Sets the PWM input type as Low-Side, Push-Pull, or High-Side. Default Push-Pull.

PWM Duty Cycle Offset
Duty Cycle offset that is added to the input to compensate for differences from the commanded signal to the actual interpreted value. This setting is provided to compensate for duty cycle variations in PWM input frequencies, voltages, and types. Adjustable range: –3% to +3%, default 0.

PWM Input-to-Position Scaling Section

PWM Duty Cycle Min Input
Sets the PWM Duty Cycle, in percent that corresponds to the Position Demand at Min Input setting. Setting the minimum duty cycle higher than the maximum is allowed to provide for a reverse acting signal as needed. Adjustable range: 5 to 95%, default 10.

PWM Duty Cycle Max Input
Sets the PWM Duty Cycle, in percent that corresponds to the Position Demand at Max Input setting. Adjustable range: 5 to 95%, default 90.

Position Demand at Min Input
Scales the position demand, in percent, for the configured PWM Duty Cycle Min Input setting. Adjustable range: 0 to 100%, default 0.

Position Demand at Max Input
Scales the position demand, in percent, for the configured PWM Duty Cycle Max Input setting. Adjustable range: 0 to 100%, default 100.

PWM Input Signal Failure Levels Section

PWM Duty Cycle Low Threshold
Sets the PWM duty cycle, in percent, which triggers a PWM Duty Cycle Low fault indication. Adjustable range: 0 to 100%, default 2.

PWM Duty Cycle High Threshold
Sets the PWM duty cycle, in percent, which triggers a PWM Duty Cycle High fault indication. Adjustable range: 0 to 100%, default 98.

Analog Input Section – *(only displayed if analog demand is used)*

The analog input section provides settings for the analog input range, analog position demand scaling and fault thresholds.

Analog Input Range
Sets the position demand analog input type as either a 4 mA to 20 mA input or a 0 mA to 200 mA input. Adjustable range: 4-20 mA, 0-200 mA, default 4-20 mA.

Analog Input Signal Scaling Section

Min Current Input
Sets the current, in milliamps, that corresponds to the Position Demand at Min Current Input setting. Setting the minimum higher than the maximum is allowed to provide for a reverse acting signal as needed.
Adjustable range for 4-20 mA input: 0.3 mA to 22 mA, default 4.
Adjustable range for 0-200 mA input: 3 mA to 220 mA, default 20.

Max Current Input
Sets the current, in milliamps, that corresponds to the Position Demand at Max Current Input setting.
Adjustable range for 4-20 mA input: 0.3 mA to 22 mA, default 20.
Adjustable range for 0-200 mA input: 3 mA to 220 mA, default 160.

Position Demand at Min Current Input
Scales the position demand, in percent, for the configured Min Current Input setting. Adjustable range: 0% to 100%, default 0.

Position Demand at Max Current Input
Scales the position demand, in percent, for the configured Max Current Input setting. Adjustable range: 0% to 100%, default 100.

Analog Signal Failure Settings Section

Analog Input Low Threshold
Sets the current, in milliamps, which triggers an analog input low fault indication.
Adjustable range for 4-20 mA input: 0.3 mA to 23.8 mA, default 2.
Adjustable range for 0-200 mA input: 3 mA to 230 mA, default 10.

Analog Input High Threshold
Sets the current, in milliamps, which triggers an analog input high fault indication.
Adjustable range for 4-20 mA input: 0.3 mA to 23.8 mA, default 22.
Adjustable range for 0-200 mA input: 3 mA to 230 mA, default 200.

Redundancy Settings Section *(only displayed if backup demand is used)*

Failback Inhibit
When the backup demand is in control (after primary has failed and is restored), this setting determines the max difference between the primary and the backup demands before transferring back into primary demand control. Allowed values: 0.0 to 100% Default: 4%

Failback Delay
Delay on the failback permissive before for allowing a transfer back to the primary demand. Allowed values: 0–100 seconds. Default: 10 seconds

Tracking Error Enable
Demand Tracking Fault selector which monitors the two demand inputs and verifies they are tracking each other within the defined window settings. Default: unchecked

Tracking Error Settings Section – *(only displayed if Tracking Error is used)*

Tracking Error Maximum (%)
Maximum deviation between the primary position demand and the backup position demand. If the Error is exceeded for longer than the Tracking Error Delay, then the Tracking Error Fault is annunciated.
Allowed values: 0% to 100% (should be set greater than the Failback Inhibit setting). Default: 10%

Tracking Error Delay (sec)
Delay for tracking error fault. Allowed values: 0–100 seconds. Default: 2 seconds

Demand to select on Track Error
Determines which demand input to select when the demands differ as determined by the tracking error detection, primary or backup. When primary is selected and a tracking error is detected, selects the backup demand input for positioning and sets the primary demand as failed. When backup is selected, selects the primary demand and sets the backup demand as failed.
Allowed values: Primary, Backup Default: Primary

Shutdown Action Section

Enable Non-Latching Faults
Global selection of latching vs non-latching faults. When latching, diagnostics fault conditions remain latched until a reset command whereas non-latching fault conditions do not require a reset. Default: checked

WARNING **A non-latching shutdown configuration can lead to a situation where the system is rapidly cycling between two states and should be used with caution.**

Shutdown Mode
Sets the action to take when a shutdown condition is detected. When set to ‘shutdown limp’, the actuator drive current is turned off. When set to ‘shutdown to position’ the actuator drives to the Shutdown Position, over-riding the position command signal during a shutdown condition. When set to ‘shutdown to position then limp’ the actuator drives to the Shutdown Position for the configured time duration (delay before limp) and then goes limp.
Options: SD Limp, SD to Position, SD to Position then Limp. default= SD Limp.

Shutdown Position – *(only displayed if shutdown to position is used)*
Sets the position command when a shutdown condition is detected. This is used when the mode is set to either ‘SD to Position’ or ‘SD to Position then Limp’. Adjustable range for 0-100%, default 0%.

Delay before Limp – *(only displayed if ‘shutdown to position then limp’ is used)*
Delay time the actuator controls at the Shutdown Position prior to transitioning to a limp (zero actuator drive current) mode. Adjustable range for 0-100 sec, default 10.

CAN Section

CAN Protocol
Sets the CAN protocol. Set to Not Used to completely disable CAN communications or to J1939 or CANopen. When a change to the CAN protocol has been saved a power cycle must be performed in order for the new protocol to operate properly. Adjustable range: Not Used, J1939, CANopen. default: J1939.

CAN Data Rate
Sets the CAN data rate for CAN1. A power cycle is required to apply changes to this setting. Note that CAN2 has a fixed data rate of 1000K bps. Be aware that data rate changes are only applied when the device is powered on. Adjustable range: 250K, 500K, or 1000K bps, default 250K.

IMPORTANT

CAN Data Rate changes could result in loss of communication on CAN1. The Service Tool connection may be established on CAN2 as an alternative on unsuccessful attempts to connect on CAN1.

Modify Time Quanta Settings selection
When checked, allows direct data rate setting of the CAN communication time quanta values. When unchecked, default values are used based on the selected CAN Data Rate. Note that data rate changes are only applied when the device is powered on. Default: unchecked.

CAN Time Quanta Settings Section

Total Time Quanta
Sets the total time quanta. Adjustable range: 8 to 25, default 8.

Sample Point Time Quanta
Sets the sample point time quanta. Adjustable range: 6 to 17, default 6.

Sync Jump Width
Sets the synchronization jump width. Adjustable range: 1 to 4, default 1.

Discrete Out Section

Type
Sets the drive output type for the discrete output signal as either low-side or high-side. Adjustable range: Low-Side or High-Side default: Low-Side.

Source
Source selection for the discrete output signal. The selected source will drive the discrete output. When Not Used, the command is false and the resultant output on/off state will depend on the normally energized setting. Adjustable range: Not Used, Alarm, Shutdown, Alarm or Shutdown, default: Alarm or Shutdown.

Normally Energized/De-energized selection
Sets the output as normally on or normally off. When checked and the Source condition is false, the discrete output will be turned on (normally energized). default: checked.

⚠WARNING

It is recommended that the Discrete Output be configured for the 'Normally Energized' mode, to ensure maximum fault protection and annunciation. Failure to follow these guidelines could, under exceptional circumstances, lead to personal injury and/or property damage.

Analog Output Scaling Section

Analog Output Min Position
Sets the actuator position, in percent, that corresponds to the output mA at Min Position setting. Adjustable range: 0% to 100%, default 0.

Analog Output Max Position
Sets the actuator position, in percent, that corresponds to the output mA at Max Position setting. Adjustable range: 0% to 100%, default 100.

Output mA at Min Position
Scales the output current for the configured analog output Min Position setting. Adjustable range: 2 mA to 22 mA, default 4.

Output mA at Max Position
Scales the output current for the configured analog output Max Position setting. Adjustable range: 2 mA to 22 mA, default 20.

Position Setup

The Position Setup screen provides settings for a position lookup curve, position demand filter, actuator travel, and min/max stop holding current.

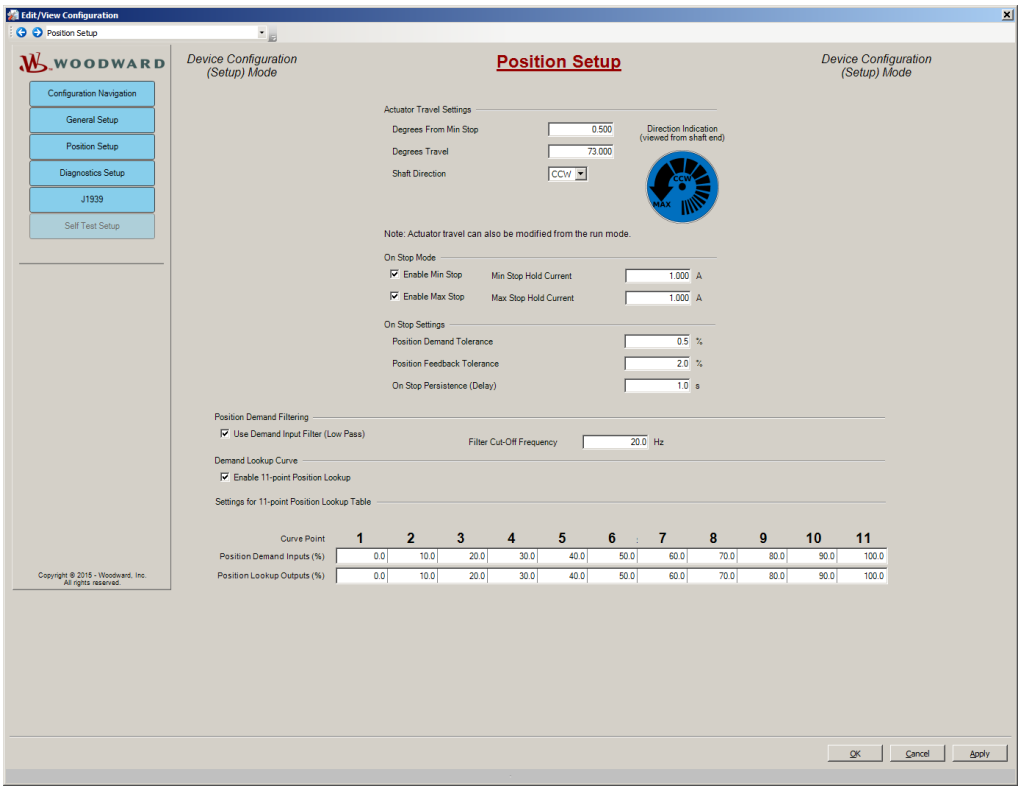

Figure 7-6. Configure Position Setup

Shaft Direction Setup Section

Degrees from Min Stop
Sets the actuator min position offset, in degrees from the min stop.
Adjustable range: 0-90°, default: 0.0

NOTICE	**The R-11, and R-30 travel is nominally 73° ± 2°. The R-120 travel is nominally 93° ± 2°. If position setup values are entered that would cause the actuator to try to move beyond the mechanical stop, the values are automatically limited to keep the 0 to 100% stroke range within the mechanical stops.**

Degrees Travel
Sets the degrees of rotation. If a span is entered that would cause the actuator to try to move beyond the mechanical stop, the travel value is automatically limited to keep the 0 to 100% stroke range within the mechanical stops.

Adjustable range: 0-95°, default: 70° for R-11 and R-30, 90° for R-120.

Shaft Direction (rotation for opening)

- **CW**–Sets the actuator rotation as clockwise for opening (increasing position demand).
- **CCW**–Sets the actuator rotation as counterclockwise for opening (increasing position demand).

Default = CW.

IMPORTANT

Actuator rotation is determined while looking into the actuator shaft end:

Clockwise

Counterclockwise

On Stop Mode Section

The controller shall optionally switch to current mode when holding a position at the stops, to eliminate chattering on the mechanical stops. This occurs after a configurable delay of continuously meeting the following criteria:

1.) position demand within configurable tolerance of min or max (demand tolerance)
2.) position feedback within configurable tolerance of min or max (feedback tolerance)

Enable Min Stop
Check this box to use the on stop mode (drive output with a fixed current as opposed to controlling position) at the min stop. Default: not used.

Enable Max Stop
Check this box to use the on stop mode at the max stop. Default: not used.

Min Stop Hold Current – *(only displayed if min stop hold is used)*
Sets the holding current when the actuator is near the min mechanical stop. Setting must also account for (include) spring load, if applicable. Adjustable range: 0.1 A to 8.0 A, default = 1.0

Max Stop Hold Current – *(only displayed if max stop hold is used)*
Sets the holding current when the actuator is near the max mechanical stop. Setting must also account for (include) spring load, if applicable. Adjustable range: 0.1 A to 8.0 A, default =1.0

On Stop Settings Section – *(only displayed if min or max stop hold is used)*

Position Demand Tolerance
Sets the tolerance for the position demand (how close to 0% or 100%) to determine if the holding current should be applied. Adjustable range: 0 to 10%, default: 0.5

Position Feedback Tolerance
Sets the tolerance for the actual position (how close to the expected stops, 0% or 100%) to determine if the holding current should be applied. Setting should account for positional measurement/detection inaccuracies (e.g., temperature drift). Adjustable range: 0 to 10%, default: 2.0

On Stop Persistence (delay)
Sets the time duration that both conditions must be met before switching to current mode.
Adjustable range: 0.1 to 5.0 seconds, default: 1.0

Position Demand Filtering Section

Use Demand Input Filter (Low Pass)
Check this box to use a low pass filter on the position demand input. Potentially used for a noisy command signal. Uncheck this box to ignore the filter.
Default: not used.

Filter Cut-Off Frequency – *(only displayed if filter is used)*
Sets the cut-off frequency of the low pass filter applied to the position command signal. Adjustable range: 1 to 20 Hz, default: 20

Demand Lookup Curve Section

Enable 11-point Position Lookup
Check this box to use the position demand curve settings. Uncheck this box to ignore the position demand curve settings. Default: not used.

Position Demand In (%) – *(only displayed if position lookup is used)*
Sets position demand input breakpoints (%) for the demand curve. Each of the 11 breakpoint values must be larger than the previous and less than the next value. Adjustable range: 0% to 100%, must be monotonically increasing. Defaults 0, 10, 20, 30, 40, 50, 60, 70, 80, 90, 100.

Position Demand Out (%) – *(only displayed if position lookup is used)*
Sets the position demand output percentage [11 points] for the configured position demand input breakpoint (%). Adjustable range: 0% to 100%, Defaults 0, 10, 20, 30, 40, 50, 60, 70, 80, 90, 100.

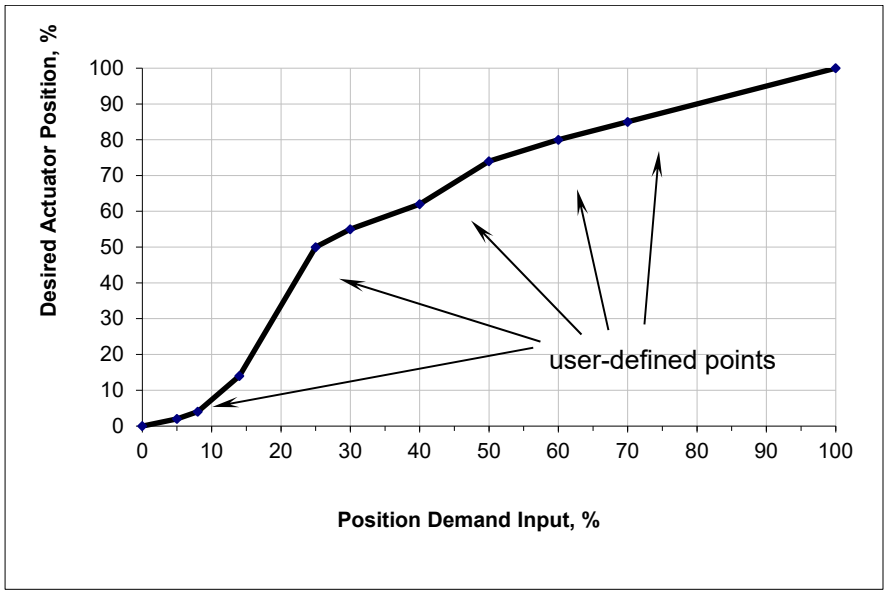

Figure 7-7. Position Lookup Curve

Diagnostic Fault Configuration

The Diagnostic Fault Configuration screen provides settings for the individually selectable diagnostics.

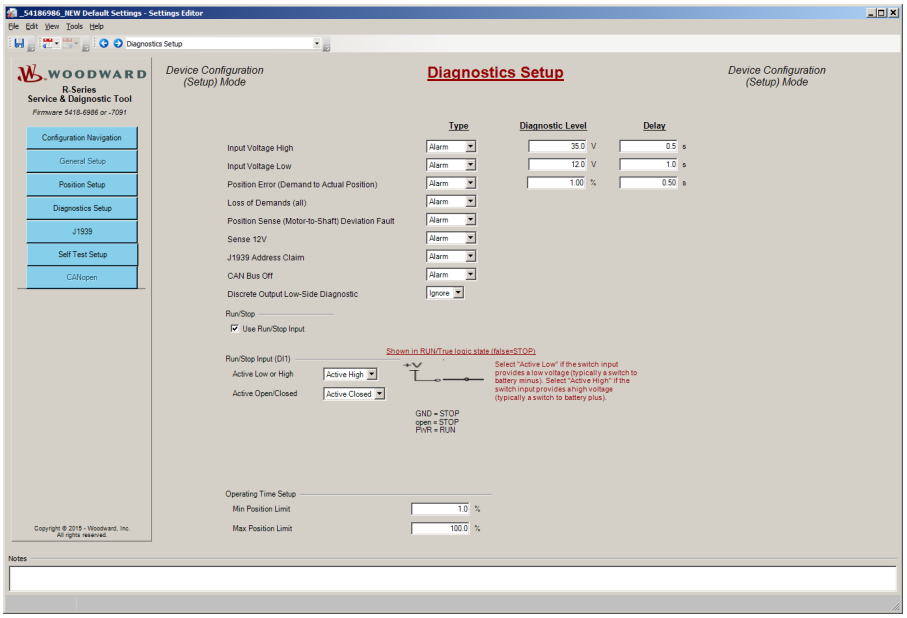

Figure 7-8. Diagnostics Setup

WARNING **It is recommended that all faults be used and configured as shutdowns to ensure maximum fault protection.**

Information on Diagnostic Type Selection

- When diagnostic condition is set as '**ignore**', the condition will not provide any indications.
- When diagnostic condition is set as an '**alarm**', provides a common alarm indication and logs the event but allows the unit to attempt to continue running.
- If diagnostic condition is set as a '**shutdown**', upon detection the configured shutdown will be executed (e.g., shutdown to position). Additionally, a common shutdown indication is provided and the event is logged in the event manager.
- The discrete output can be utilized to indicate a common alarm or common shutdown.
- Individual diagnostic status is available in CAN messages.

For details on each fault condition, refer to the Diagnostics section of the Description of Operation, Chapter 4.

Individual Diagnostic Setup Section

Input Voltage High Diagnostic Type

Selects the diagnostic action for input voltage high diagnostic condition.
Adjustable range: Ignore, Alarm, Shutdown, default Ignore.

Input Voltage High Diagnostic Threshold

Sets the voltage, in V (dc), which triggers an input voltage high diagnostic indication.
Adjustable range: 0 to 40 V (dc), default 35.

Input Voltage High Delay

Sets the high voltage diagnostic delay time, in seconds, before triggering an input voltage high diagnostic indication. Note this time setting is in addition to a fixed 0.5s delay time. Adjustable range: 0 to 120 seconds, default 0.5

Input Voltage Low Diagnostic Type
Selects the diagnostic action for input voltage low diagnostic condition.
Adjustable range: Ignore, Alarm, Shutdown, default Ignore.

Input Voltage Low Diagnostic Threshold
Sets the voltage, in V (dc), which triggers an input voltage low diagnostic indication.
Adjustable range: 0 to 32 V (dc), default 12.

Input Voltage Low Delay
Sets the low voltage diagnostic delay time, in seconds, before triggering an input voltage low diagnostic indication. Adjustable range: 0 to 120 seconds, default 1.0

Position Error (Demand-to-Actual position) Diagnostic Type
Selects the diagnostic action for the position error diagnostic condition. This indicates a deviation is detected between the commanded position and actual position.
Adjustable range: Ignore, Alarm, Shutdown, default Ignore.

Position Error Diagnostic Threshold
Sets the difference, in percentage, which triggers a diagnostic indication.
Adjustable range: 0 to 100%, default 1.0.

Position Error Delay
Sets the position error diagnostic delay time, in seconds, before triggering a diagnostic indication.
Adjustable range: 0 to 100 seconds, default 0.5

Loss of Demands (all) Type
Selects the diagnostic action for the loss of all position demands diagnostic condition.
Adjustable range: Ignore, Alarm, Shutdown, default Ignore.

Position Sense Deviation Diagnostic Type
Selects the diagnostic action for the position sense deviation diagnostic condition. This indicates a deviation is detected between the two internal position sensors.
Adjustable range: Ignore, Alarm, Shutdown, default Ignore.

Sense 12 V Diagnostic Type
Selects the diagnostic action for input voltage low diagnostic condition.
Adjustable range: Ignore, Alarm, Shutdown, default alarm.

J1939 Address Claim Diagnostic Type – *(only displayed if J1939 is used)*
Selects the diagnostic action for the J1939 address claim diagnostic condition.
Adjustable range: Ignore, Alarm, Shutdown, default Ignore.

CAN Bus Off Diagnostic Type – *(only displayed if J1939 is used)*
Selects the diagnostic action for the CAN Bus Off diagnostic condition.
Adjustable range: Ignore, Alarm, Shutdown, default Ignore.

Discrete Out Low Side Diagnostic Type – *(only displayed if discrete out low-side type is used)*
Selects the diagnostic action for discrete out diagnostic condition.
Adjustable range: Ignore, Alarm, Shutdown, default Ignore.

RUN / STOP Section

The section defines the Run/Stop input (discrete input 1) logic. When the input is true, a run is commanded and when it is false a stop is commanded. The input has three states, connected to power (PWR), connected to ground (GND), and unconnected. The following figures aid in understanding the RUN and STOP conditions for each configuration.

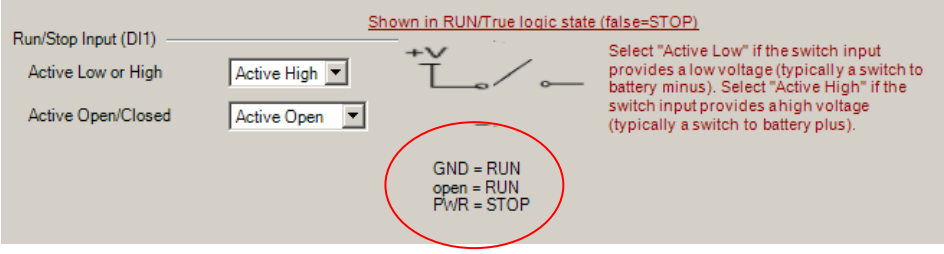

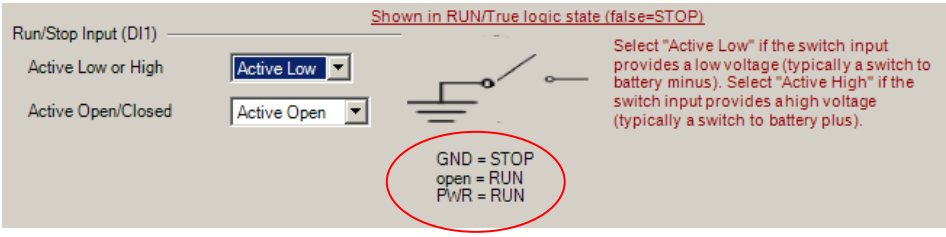

Active Low or High
Select active high if the switch input provides a high voltage (typically a switch to battery positive) or active low if the switch input provides a low voltage (typically a switch to battery minus).
Adjustable range: active high or active low Default: active low.

Active Open/Closed
Select active closed to activate the condition with a closed switch contact (closed=on, open=off) or select active open to activate with an open contact (open=on, closed=off).
Adjustable range: active closed or active open Default: active closed.

Operating Time Setup Section

The section defines the conditions that determine the operating time, which is displayed on the Overview page. When the commanded position is between the defined maximum and minimum limits (inclusive), the device is determined to be operating and the operating time will increase.

Max Position Limit
Sets the maximum commanded position to be considered in an operating mode.
Allowed values: 0-100% Default: 100

Min Position Limit
Sets the minimum commanded position to be considered in an operating mode.
Allowed values: 0-100% Default: 1

J1939 Settings

The configure CAN screen provides settings for the Controller Area Network (CAN) communications port.

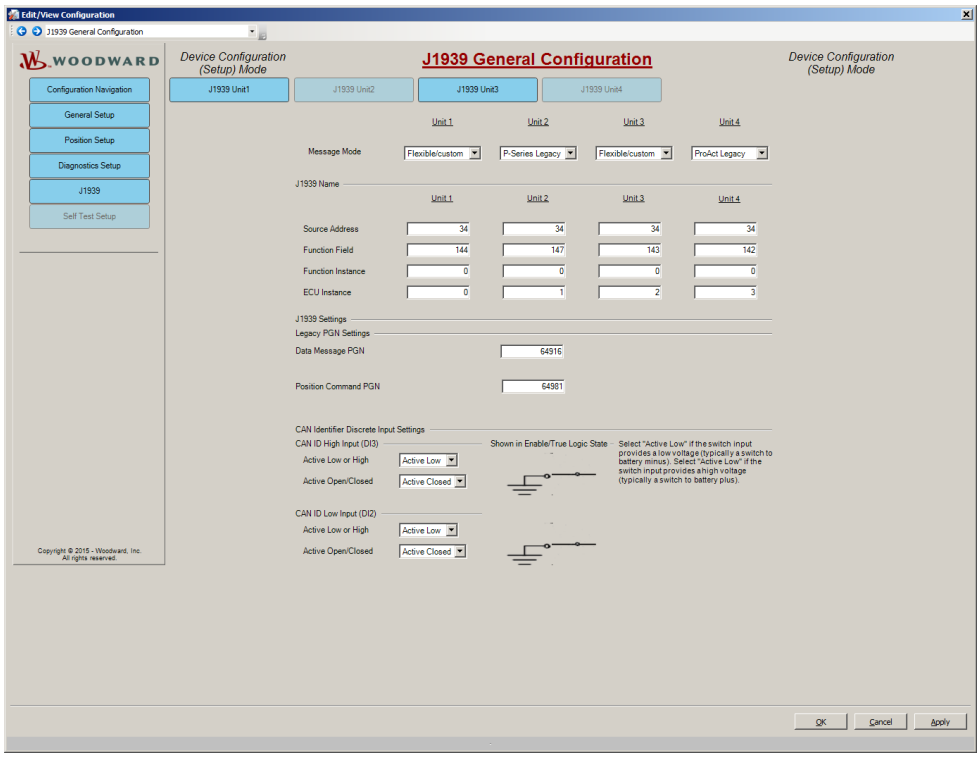

Figure 7-9. J1939 (General Settings)

Message Mode

Select the J1939 messaging mode. Two legacy mode selections are available, P-Series or ProAct, which provide preconfigured messages. The flexible/custom mode allows a flexible configuration of the messages. When selected, the individual message setup is available on subsequent pages (e.g., J1939 Unit1). With P-Series Legacy, the data and position command PGNs are configurable (see Legacy PGN Settings). With ProAct Legacy, all messaging is preconfigured. No additional settings are provided aside from the J1939 Name.
Adjustable range: Flexible/custom, ProAct Legacy or P-Series Legacy. Default: Flexible/custom.

J1939 NAME Section

Source Address

Sets the J1939 source address for each harness code address (Unit 1-4).
Allowed values: 0-253 Defaults: 34, 34, 34, 34

Function Field

Sets the J1939 Name function field for each harness code address (Unit 1-4).
Allowed values: 0-255 Default: 144, 147, 143, 142

Function Instance

Sets the J1939 Name function instance for each harness code address (Unit 1-4).
Allowed values: 0-31 Default: 0 (First Instance)

ECU Instance

Sets the J1939 Name ECU instance field for each harness code address (Unit 1-4).
Allowed values: 0-7 Defaults: 0, 1, 2, 3

Legacy PGN Settings Section

Data Message PGN – *(only displayed if P-Series Legacy is used)*
Sets the PGN for the data message (Tx) when P-Series legacy mode is selected. Allowed values: 0-131071. Shall not be a reserved PGN, see listing in Configuration Check section. Defaults: 65266, 64916, 65174, 64931

Position Command PGN – *(only displayed if P-Series Legacy is used)*
Sets the PGN for the position command (Rx) message when P-Series legacy mode is selected. Allowed values: 0-131071. Shall not be a reserved PGN, see listing in Configuration Check section. Defaults: 61466, 64981, 61486, 64931

CAN Identifier Discrete Input Settings section

CAN ID
The CAN unit number is determined on power-up by reading Discrete Input 2 and Discrete Input 3 and determining the selected unit number (see chart below) based on the configuration of the CAN ID HIGH and LOW. Discrete input 3 is CAN ID HIGH and discrete input 2 is CAN ID LOW.

Unit Number	CanIdHigh	CanIdLow
1	Off	Off
2	Off	On
3	On	Off
4	On	On

CAN ID HIGH Input (DI 3) Settings Section

Active Low or High
Select active high if the switch input provides a high voltage (typically a switch to battery positive) or active low if the switch input provides a low voltage (typically a switch to battery minus).
Adjustable range: active high or active low Default: active low.

Active Open/Closed
Select active closed to activate the condition with a closed switch contact (closed=on, open=off) or select active open to activate with an open contact (open=on, closed=off).
Adjustable range: active closed or active open Default: active closed.

CAN ID LOW Input (DI 2) Settings section

Active Low or High
Select active high if the switch input provides a high voltage (typically a switch to battery positive) or active low if the switch input provides a low voltage (typically a switch to battery minus).
Adjustable range: active high or active low Default: active low.

Active Open/Closed
Select active closed to activate the condition with a closed switch contact (closed=on, open=off) or select active open to activate with an open contact (open=on, closed=off).
Adjustable range: active closed or active open Default: active closed.

IMPORTANT **The CAN ID discrete inputs are read at power up, changes to configuration settings or input state will not take effect until the next power cycle.**

J1939 Unit 1-4

These four pages provide settings for the diagnostics support and data message configuration (SPN, PGN, data location, priority and update rate). A separate page is provided for each J1939 CAN ID (i.e., Unit 1-4).

Examples and detailed explanations are provided in Appendix A. The default values correspond as:

Unit 1: Engine Compressor Bypass – Instance 1
Unit 2: Engine Throttle Valve – Instance 1
Unit 3: Engine Fuel Rack
Unit 4: Engine Turbocharger Wastegate – Instance 1

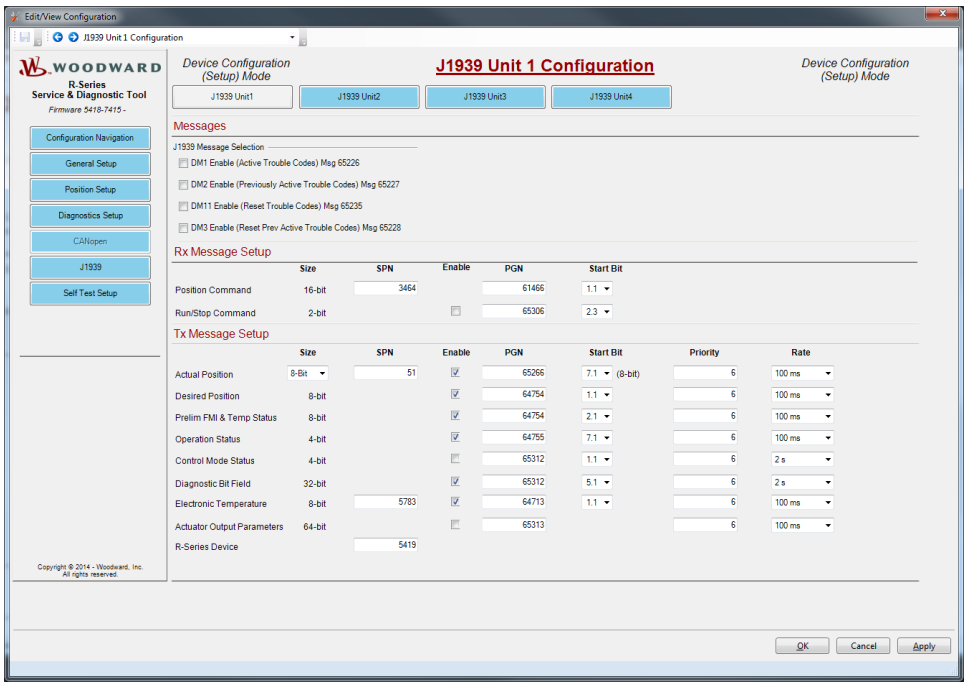

Figure 7-10. Unit 1 J1939 Configuration

Diagnostics Support Section

Enable DM1 (Active Trouble Codes) Msg 65226
Enables DM1 messages to be sent 1/sec with active diagnostics. Default unchecked.

Enable DM2 (Previously Active Trouble Codes) Msg 65227
Enables DM2 messages to be sent upon request with previously active diagnostics. Default unchecked.

Enable DM3 (Reset Previously Active Trouble Codes) Msg 65228
Enables DM3 support for resetting previously active faults. Default unchecked.

Enable DM11 (Reset Trouble Codes) Msg 65235
Enables DM11 support for resetting active faults. Default unchecked.

Inputs (Rx) Section

Position Command Settings

These settings are only used when CAN is configured as a primary or backup position demand input (see Configure Position Demand page).

SPN: Allowed values: 0-524287, should be unique within Unit x. Defaults: 3464, 2791, 5386, 3470. Used specifically for CAN Demand and CAN Bad Signal errors.

PGN: Allowed values: 0-131071. Shall not be a reserved PGN, see listing in Configuration Check section. Defaults: 61466, 64981, 61486, 64931
Start Bit: Allowed values: 1.1, 2.1, 3.1, 4.1, 5.1, 6.1, 7.1. PGN data must not overlap. Defaults: 1.1, 5.1, 1.1, 1.1
Length: 16

Run/Stop Command Settings
This is a 2-bit proprietary SPN providing run/stop functionality.
Message: Values: Disabled, Enabled Default: Enabled
PGN: Allowed values: 0-131071. Shall not be a reserved PGN, see listing in Configuration Check section. Defaults: 65306, 65307, 65308, 65309
Start Bit: Allowed values: 1.1, 1.3, 1.5, 1.7, 2.1, 2.3, 2.5, 2.7, 3.1, 3.3, 3.5, 3.7, 4.1, 4.3, 4.5, 4.7, 5.1, 5.3, 5.5, 5.7, 6.1, 6.3, 6.5, 6.7, 7.1, 7.3, 7.5, 7.7, 8.1, 8.3, 8.5, 8.7. PGN data must not overlap. Defaults: 3.5, 3.5, 3.5, 3.5
Length: 2

Outputs (Tx) Section

Actual Position Data Settings
SPN: Allowed values: 0-524287, should be unique within Unit x. Defaults: 51, 27, 1188, 3675. Used specifically for Position Error.
Message: Values: Disabled or Enabled Default: Enabled
Size: Allowed values: 8-bit or 16-bit Default: 8-bit, 16-bit, 8-bit, 16-bit
PGN: Allowed values: 0-131071. Shall not be a reserved PGN, see listing in Configuration Check section. Defaults: 65266, 64916, 65174, 64931. For PGN PDU1 type, add destination address under which message shall be sent.
Start Bit (for 8-bit selection): Allowed values: 1.1, 2.1, 3.1, 4.1, 5.1, 6.1, 7.1, 8.1. PGN data must not overlap. Default: 7.1, 1.1, 1.1, 4.1
Start Bit (for 16-bit selection): Allowed values: 1.1, 2.1, 3.1, 4.1, 5.1, 6.1, 7.1. PGN data must not overlap. Default for 16-bit: 1.1, 1.1, 1.1, 1.1
Priority: Allowed values: 0-7. Priority must be identical within a PGN. Default: 6,6,6,4
Rate: Allowed values: 20 ms, 50 ms, 100 ms, 200 ms, 500 ms, 1 s, 2 s, On Request. Rate must be identical within a PGN. Default: 100 ms

Desired Position Data Settings
Message: Values: Disabled, Enabled Default: Enabled
PGN: Allowed values: 0-131071. Shall not be a reserved PGN, see listing in Configuration Check section. Defaults: 64754, 64715, 65174, 64931. For PGN PDU1 type, add destination address under which message shall be sent.
Start Bit: Allowed values: 1.1, 2.1, 3.1, 4.1, 5.1, 6.1, 7.1, 8.1. PGN data must not overlap. Default: 1.1, 3.1, 6.1, 7.1
Length: 8
Priority: Allowed values: 0-7. Priority must be identical within a PGN. Default: 6,6,6,4
Rate: Allowed values: 20 ms, 50 ms, 100 ms, 200 ms, 500 ms, 1 s, 2 s, On Request. Rate must be identical within a PGN. Default: 100 ms

Prelim FMI & Temp Status Data Settings
Message: Values: Disabled, Enabled Default: Enabled
PGN: Allowed values: 0-131071. Shall not be a reserved PGN, see listing in Configuration Check section. Defaults: 64754, 64715, 65174, 64931. For PGN PDU1 type, add destination address under which message shall be sent.
Start Bit: Allowed values: 1.1, 2.1, 3.1, 4.1, 5.1, 6.1, 7.1, 8.1. PGN data must not overlap. Default: 2.1, 1.1, 7.1, 8.1
Length: 8
Priority: Allowed values: 0-7. Priority must be identical within a PGN. Default: 6
Rate: Allowed values: 20 ms, 50 ms, 100 ms, 200 ms, 500 ms, 1 s, 2 s, On Request . Rate must be identical within a PGN. Default: 100 ms

Operation Status Data Settings
Message: Values: Disabled, Enabled Default: Enabled
PGN: Allowed values: 0-131071. Shall not be a reserved PGN, see listing in Configuration Check section. Default: 64755, 64715, 64753, 64755. For PGN PDU1 type, add destination address under which message shall be sent.
Start Bit: Allowed values: 1.1, 1.5, 2.1, 2.5, 3.1, 3.5, 4.1, 4.5, 5.1, 5.5, 6.1,6.5, 7.1, 7.5, 8.1, 8.5 . PGN data must not overlap. Defaults: 7.1, 7.1, 2.1, 4.1
Length: 4
Priority: Allowed values: 0-7. Priority must be identical within a PGN. Default: 6
Rate: Allowed values: 20 ms, 50 ms, 100 ms, 200 ms, 500 ms, 1 s, 2 s, On Request . Rate must be identical within a PGN. Default: 100 ms

Control Mode Data Settings
Settings for the Control Mode data. This is a proprietary SPN consisting of 4 bits of data.
Message: Values: Disabled, Enabled Default: Disabled
PGN: Allowed values: 0-131071. Shall not be a reserved PGN, see listing in Configuration Check section. Default: 65312, 65312, 65312, 65312. For PGN PDU1 type, add destination address under which message shall be sent.
Start Bit: Allowed values: 1.1, 1.5, 2.1, 2.5, 3.1, 3.5, 4.1, 4.5, 5.1, 5.5, 6.1,6.5, 7.1, 7.5, 8.1, 8.5. PGN data must not overlap. Defaults: 1.1, 5.1, 5.1, 5.1
Length: 4
Priority: Allowed values: 0-7. Priority must be identical within a PGN. Default: 6
Rate: Allowed values: 20 ms, 50 ms, 100 ms, 200 ms, 500 ms, 1 s, 2 s, On Request . Rate must be identical within a PGN. Default: 1 s

Diagnostic Bit Field Data Settings
Settings for the diagnostics bit data. This is a proprietary SPN consisting of 32 bits of data.
Message: Values: Disabled, Enabled Default: Disabled
PGN: Allowed values: 0-131071. Shall not be a reserved PGN, see listing in Configuration Check section. Default: 65312, 65312, 65312, 65312. For PGN PDU1 type, add destination address under which message shall be sent.
Start Bit: Allowed values: 1.1, 2.1, 3.1, 4.1, 5.1. PGN data must not overlap. Defaults: 5.1, 1.1, 1.1, 1.1
Length: 32
Priority: Allowed values: 0-7. Priority must be identical within a PGN. Default: 6
Rate: Allowed values: 20 ms, 50 ms, 100 ms, 200 ms, 500 ms, 1 s, 2 s, On Request. Rate must be identical within a PGN. Default: 1 s

Electronics Temperature Data Settings
SPN: Allowed values: 0-524287, should be unique within Unit x. Default: 5783, 5765, 5788, 5791. Used Specifically for Temperature Sensor Failed, Torque Derating Active, and Zero Torque.
Message: Values: Disabled, Enabled Default: Enabled
PGN: Allowed values: 0-131071. Shall not be a reserved PGN, see listing in Configuration Check section. Default: 64713, 64715, 64753, 64755. For PGN PDU1 type, add destination address under which message shall be sent.
Start Bit: Allowed values: 1.1, 2.1, 3.1, 4.1, 5.1, 6.1, 7.1, 8.1 . PGN data must not overlap. Defaults: 1.1, 2.1, 6.1, 5.1
Length: 8
Priority: Allowed values: 0-7. Priority must be identical within a PGN. Default: 6
Rate: Allowed values: 20 ms, 50 ms, 100 ms, 200 ms, 500 ms, 1 s, 2 s, On Request. Rate must be identical within a PGN. Default: 100 ms

Actuator Output Parameters Data Settings
Message: Values: Disabled, Enabled Default: Disabled
PGN: Allowed values: 0-131071. Shall not be a reserved PGN, see listing in Configuration Check section. Default: 65313. For PGN PDU1 type, add destination address under which message shall be sent.
Priority: Allowed values: 0-7. Priority must be identical within a PGN. Default: 6
Rate: Allowed values: 20 ms, 50 ms, 100 ms, 200 ms, 500 ms, 1 s, 2 s, On Request. Rate must be identical within a PGN. Default: 100 ms

R-Series Device SPN
Sets the device SPN (19-bits) for DM1 and DM2 usage.
Allowed values: 0-524287, should be unique within Unit x. Defaults: 5419, 5838, 5421, 5420
Priority: Allowed values: 0-7. Priority must be identical within a PGN. Default: 6
Rate: Allowed values: 20 ms, 50 ms, 100 ms, 200 ms, 500 ms, 1 s, 2 s, On Request. Rate must be identical within a PGN. Defaults: 100 ms, 1 s, 1 s, 100 ms

Self-Test Setup Page
Provides the settings for the self-test.

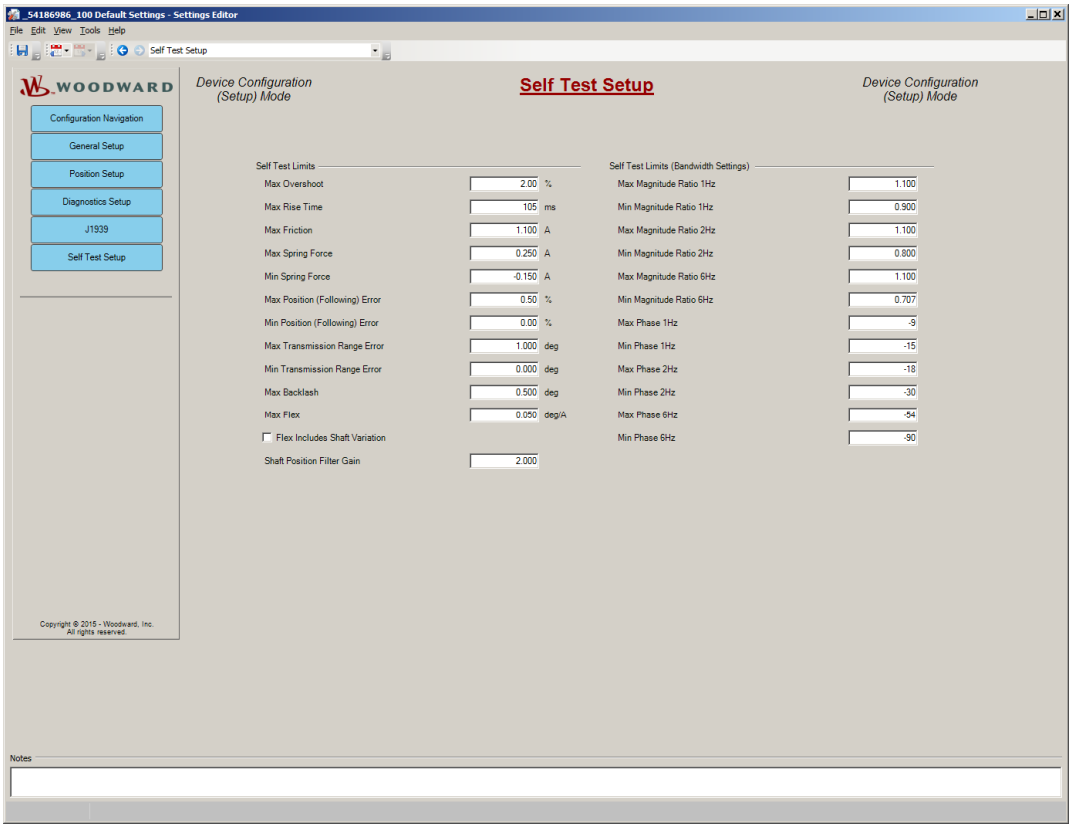

Figure 7-11. Self-Test Setup Page

For details on each test, see Self-Test section in Chapter 6.

Max Overshoot
Sets the maximum overshoot and undershoot, in percentage.
Adjustable range: 0 to 10%, default 2.0.

Max Rise Time
Sets the maximum rise and fall time, in milliseconds.
Adjustable range: 0 to 1200 ms, default 105.

Max Friction
Sets the maximum friction, in amps.
Adjustable range: 0 to 6 A, default 1.1.

Max Spring Force
Sets the maximum spring force, in amps.
Adjustable range: -6 to 6 A, default 0.25.

Min Spring Force
Sets the minimum spring force, in amps.
Adjustable range: -6 to 6 A, default -0.15.

Max Position (following) Error
Sets the maximum position error (setpoint-actual) during the position up and down ramps, captured between 5 and 95%. Adjustable range: 0 to 5%, default 0.5.

Min Position (following) Error
Sets the minimum position error (setpoint-actual) during the position ramps. Adjustable range: 0 to 5%, default 0.0.

Max Transmission Range Error
Sets the maximum transmission range during the position ramps, both up and down. The maximum and minimum values are captured between 10 and 90%, resulting in a range. This limit checks the range of the difference seen between the motor and shaft position signals. Adjustable range: 0 to 5°, default 1.0.

Min Transmission Range Error
Sets the minimum transmission range during the position ramps.
Adjustable range: 0 to 5°, default 0.0.

Max Backlash
Sets the maximum gearbox backlash, in degrees.
Adjustable range: 0 to 10°, default 0.5.

Max Flex
Sets the maximum gearbox flex, in degrees per amp.
Adjustable range: 0 to 10 deg/A, default 0.05.

Flex Includes Shaft Variation
When checked, the flex test includes position changes in the shaft. This is used when the stops are compliant (soft) and can move slightly. The test results will account for this in its stiffness (flex) determination. When unchecked, shaft deflection is not accounted for in the overall flex determination (and assumed rigid). Default: true.

Shaft Position Filter Gain
Sets the filtering on the shaft position signal used when ‘flex includes shaft variation’ is selected. This setting is used to reduce noise/variation on the shaft position. Used only in the flex test. Adjustable range: 0 to 5%, default 0.0.

Max Magnitude Ratio 1Hz
Sets the maximum magnitude ratio during the 1Hz bandwidth check. This is the ratio of position setpoint to actual position at the test frequency.
Adjustable range: 0 to 1.5 default 1.1

Min Magnitude Ratio 1Hz
Sets the minimum magnitude ratio during the 1Hz bandwidth check.
Adjustable range: 0 to 1.5 default 0.9

Max Magnitude Ratio 2Hz
Sets the maximum magnitude ratio during the 2Hz bandwidth check. This is the ratio of position setpoint to actual position at the test frequency.
Adjustable range: 0 to 1.5 default 1.05

Min Magnitude Ratio 2Hz
Sets the minimum magnitude ratio during the 2Hz bandwidth check.
Adjustable range: 0 to 1.5 default 0.8

Max Magnitude Ratio 6Hz
Sets the maximum magnitude ratio during the 6Hz bandwidth check. This is the ratio of position setpoint to actual position at the test frequency.
Adjustable range: 0 to 1.5 default 1.0

Min Magnitude Ratio 6Hz
Sets the minimum magnitude ratio during the 6Hz bandwidth check.
Adjustable range: 0 to 1.5 default 0.707

Max Phase 1Hz
Sets the maximum phase lag during the 1Hz bandwidth check.
Adjustable range: -180 to 0 default -9

Min Phase 1Hz
Sets the minimum phase lag during the 1Hz bandwidth check.
Adjustable range: -180 to 0 default -15

Max Phase 2Hz
Sets the maximum phase lag during the 2Hz bandwidth check.
Adjustable range: -180 to 0 default -18

Min Phase 2Hz
Sets the minimum phase lag during the 2Hz bandwidth check.
Adjustable range: -180 to 0 default -30

Max Phase 6Hz
Sets the maximum phase lag during the 6Hz bandwidth check.
Adjustable range: -180 to 0 default -54

Min Phase 6Hz
Sets the minimum phase lag during the 6Hz bandwidth check.
Adjustable range: -180 to 0 default -90

CANopen Page-*(not available in firmware 5418-6986. CANopen is at prototype maturity level in 5418-7091 and fully supported in 5418-7415)*

Provides the settings for the CANopen communications.

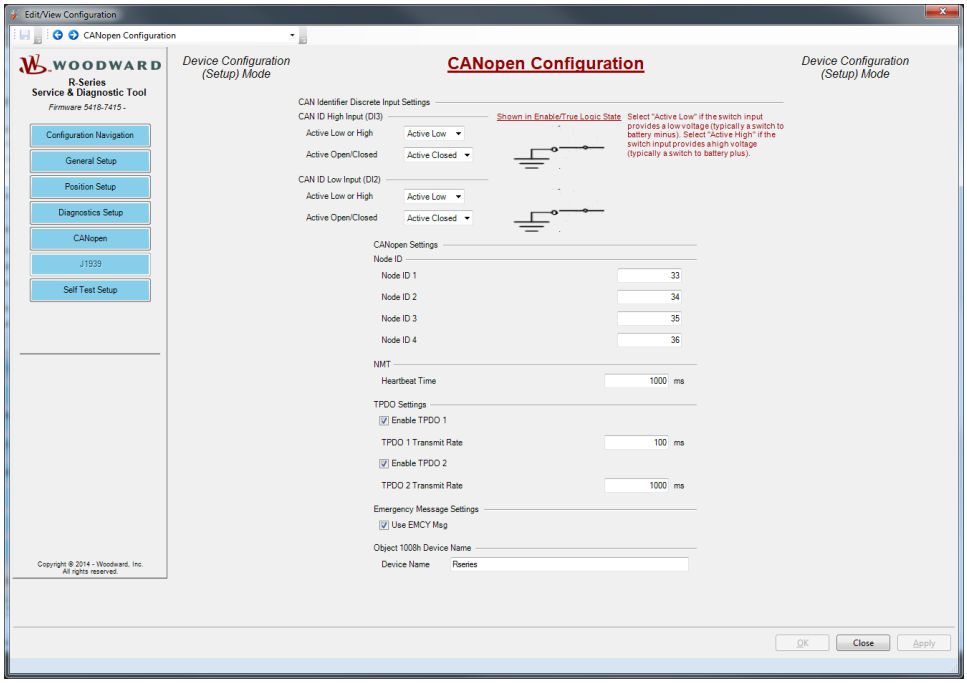

Figure 7-12. CANopen Configuration Page

CAN ID HIGH Input (DI 3) Settings Section

Active Low or High
Select active high if the switch input provides a high voltage (typically a switch to battery positive) or active low if the switch input provides a low voltage (typically a switch to battery minus).
Adjustable range: active high or active low Default: active low.

Active Open/Closed
Select active closed to activate the condition with a closed switch contact (closed=on, open=off) or select active open to activate with an open contact (open=on, closed=off).
Adjustable range: active closed or active open Default: active closed.

CAN ID LOW Input (DI 2) Settings Section

Active Low or High
Select active high if the switch input provides a high voltage (typically a switch to battery positive) or active low if the switch input provides a low voltage (typically a switch to battery minus).
Adjustable range: active high or active low Default: active low.

Active Open/Closed
Select active closed to activate the condition with a closed switch contact (closed=on, open=off) or select active open to activate with an open contact (open=on, closed=off).
Adjustable range: active closed or active open Default: active closed.

IMPORTANT	**The CAN ID discrete inputs are read at power up, changes to configuration settings or input state will not take effect until the next power cycle.**

CANopen Settings Section

NODE ID 1
Sets the node ID when the CAN ID discrete inputs select unit 1.
Adjustable range: 1 to 127 default: 33

NODE ID 2
Sets the node ID when the CAN ID discrete inputs select unit 2.
Adjustable range: 1 to 127 default: 34

NODE ID 3
Sets the node ID when the CAN ID discrete inputs select unit 3.
Adjustable range: 1 to 127 default: 35

NODE ID 4
Sets the node ID when the CAN ID discrete inputs select unit 4.
Adjustable range: 1 to 127 default: 36

NMT Heartbeat Time
Sets the NMT heartbeat message transmission rate, in milliseconds. When set to zero, the message is turned off.
Adjustable range: 0 to 65535 default: 1000

Enable TPDO 1
When checked, allows TPDO 1 message. When unchecked, the message is turned off, regardless of the TPDO 1 Transmit Rate setting. Default: true.

TPDO 1 Transmit Rate
Sets the message transmission rate for TPDO 1, in milliseconds. When set to zero, the message is turned off.
Adjustable range: 0 to 30000 default: 1000

Enable TPDO 2
When checked, allows TPDO 2 message. When unchecked, the message is turned off, regardless of the TPDO 2 Transmit Rate setting. Default: true.

TPDO 2 Transmit Rate
Sets the message transmission rate for TPDO 2, in milliseconds. When set to zero, the message is turned off.
Adjustable range: 0 to 30000 default: 1000

Emergency Message Settings Section

Use EMCY Message
When checked, enables the EMCY message. When unchecked, the message is turned off. Default: true.

Include Diagnostic Bits (only in firmware 5418-7091 NEW)
When unchecked all diagnostics are included (OR'd) in the generic error. This means the active diagnostics bits must be monitored separately to determine changes in individual errors (error reset or new error condition). In this case the EMCY message will be sent when the first diagnostic is detected and then again when all diagnostics are cleared. When checked, the EMCY message is sent when any active diagnostic changes state. Default: false.

Object 1008h Device Name Section (not in firmware 5418-7091 NEW)

Provides a way to change object 1008h, Device Name, so that multiple, otherwise identical units on an engine have unique names.

Save the Configuration Settings File

Once all configuration settings have been made in the Settings Editor, click ‘File’ on the Settings Editor menu bar and select ‘Save’ to overwrite the existing Settings File or select ‘Save As’ to create a new configuration Settings File. You will be prompted for a new file name.

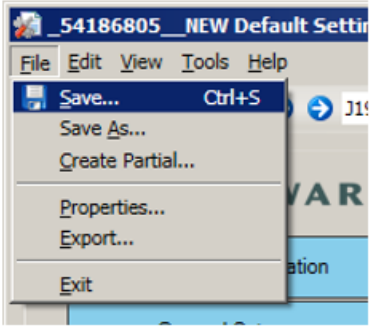

Figure 7-13. Settings Save

Load the Configuration Settings to the Control

Once all configuration settings have been saved to a Settings File, the settings can be loaded to the R-Series control. From the main tool, select ‘settings’ then ‘Load Settings File to Device’ on the R-Series Service Tool menu bar. This will start a wizard to assist in the loading process.

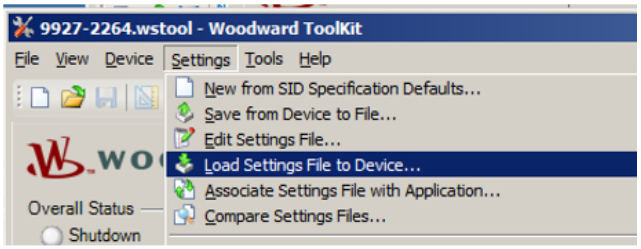

Figure 7-14. Settings Load

A Loading Settings window opens (Figure 7-11). After the settings have been loaded into the control and saved, they are checked. When completed, a successful load message is displayed (Figure 7-12).

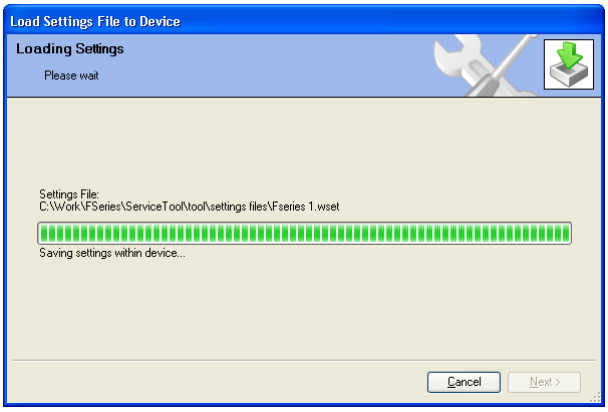

Figure 7-15. Loading Settings Window

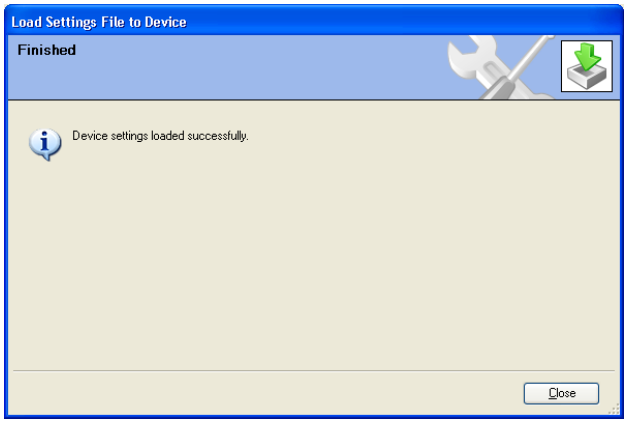

Figure 7-16. Load Settings Finished

Configuration Checks

This section contains a complete listing of the configuration errors provided in the R-Series. When settings are loaded into the control, they are sanity checked for validity. If issues are discovered with the settings, they are indicated as a configuration error fault. This alarm condition indicates something that should be addressed but is not severe enough to prevent device operation.

Configuration check summary:

- Data Rate Mismatch
- Priority Mismatch
- SPN Duplication
- Invalid PGN

When J1939 is the selected CAN protocol, each CAN Unit (1-4) that is configured to use the Flexible/custom message mode is checked individually. Since only one set of CAN data is active at a time, all configuration checks are within a specific unit's settings - not unit-to-unit. Messages that are disabled are not checked. The Position Command RX message is only checked if used.

Data Rate Mismatch
Indicates a transmit rate value mismatch is detected. The rate settings within any PGN must be the same.

Priority Mismatch
Indicates a priority value mismatch is detected. The priority settings within any PGN must be the same.

SPN Duplication
Indicates non-unique SPNs have been configured. Within each CAN unit (1-4), all SPN values must be unique.

Invalid PGN
Indicates a reserved PGN has been configured. The listing of reserved PGNs checked by the R-Series is provided below.

Reserved PGN Listing

The following PGNs are not allowed:

- 60928-61183 (0xEE00-0xEEFF) reserved for Address Claimed
- 65226 (0xFECA) reserved for DM1 - Active Diagnostic Trouble Codes
- 65227 (0xFECB) reserved for DM2 - Previously Active Diagnostic Trouble Codes
- 65228 (0xFECC) reserved for DM3 - Diagnostics Data Clear/Reset for Previously Active DTCs
- 65235 (0xFED3) reserved for DM11 - Diagnostic Data Clear/Reset for Active DTCs
- 57088-57343 (0xDF00-0xDFFF) reserved for DM13 - Stop Start Broadcast
- 60416-60671 (0xEC00-0xECFF) reserved for Transport Protocol – Connection Management
- 60160-60415 (0xEB00-0xEBFF) reserved for Transport Protocol – Data Transfer
- 59904-60159 (0xEA00-0xEAFF) reserved for PGN Request Message
- 59392-59647 (0xE800-0xE8FF) reserved for Acknowledgment Message
- 65242 (0xFEDA) reserved for Software Identification
- 64965 (0xFDC5) reserved for ECU Identification Information

Exporting the Settings File Configuration

A Settings File configuration can be exported to an *.htm document file. This provides for listing the configuration settings, printing a hard copy of the settings or e-mailing the control settings.

To select settings file to be exported, from the main tool, select ‘Settings’ then ‘Edit Settings File’ on the R-Series Service Tool menu bar and choose proper settings file.

Once the Settings Editor screen opens, select ‘’File, Export’ on the menu bar. The export format can be selected as either hierarchical or tabular. Select Browse for the file name and location selection window. Select Close to cancel.

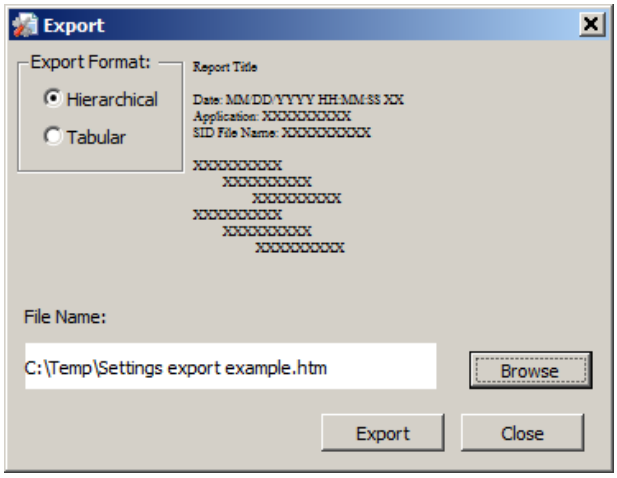

Figure 7-17 Export Format Selection

C:\Temp\Settings export example.htm - Windows Internet Explorer

Date: 2/3/2015 12:00:29 PM
Application: Partial Calibration from _54186805__NEW on 1/28/2015-8:36 AM
SID File Name: _54186805__NEW.sid

General Setup			
	Operating Mode		
		Primary Demand Source	J1939
		Backup Demand	PWM
	Redundancy Settings		
		Failback Inhibit	4.0 %
		Failback Delay	10.0 s
		Track Error Enable	True
	Shutdown Action		
		Enable Non-Latching Faults	True
		Mode	SD to Position then Limp
	CAN		
		Protocol	None
	Discrete Output		
		Type	Low-Side
		Source	Alarm or Shutdown
		Normally Energized (Off For Condition)	True
	Position	0.0 %	
	Position	100.0 %	
	Output	4.0 mA	
	Output	20.0 mA	
Position Setup			
	Enable 11-point Position Lookup	True	
	Degrees From Min Stop	0.000	
	Degrees Travel	69.998	
	Shaft Direction	CW	
	Enable Min Stop	True	
	Enable Max Stop	True	
Diagnostics Setup	Alarm		
Diagnostics Setup	35.0 V		
Diagnostics Setup	Alarm		
Diagnostics Setup	12.0 V		
Diagnostics Setup	1.0 s		

Figure 7-18. Hierarchical Example

C:\Temp\Settings export example tabular.htm - Windows Internet Explorer

Date: 2/3/2015 12:01:55 PM
Application: Partial Calibration from _54186805__NEW on 1/28/2015-8:36 AM
SID File Name: _54186805__NEW.sid

General Setup	**Operating Mode**	Primary Demand Source	J1939
General Setup	**Operating Mode**	Backup Demand	PWM
General Setup	**Redundancy Settings**	Failback Inhibit	4.0 %
General Setup	**Redundancy Settings**	Failback Delay	10.0 s
General Setup	**Redundancy Settings**	Track Error Enable	True
General Setup	**Shutdown Action**	Enable Non-Latching Faults	True
General Setup	**Shutdown Action**	Mode	SD to Position then Limp
General Setup	**CAN**	Protocol	None
General Setup	**Discrete Output**	Type	Low-Side
General Setup	**Discrete Output**	Source	Alarm or Shutdown
General Setup	**Discrete Output**	Normally Energized (Off For Condition)	True

Figure 7-19. Tabular Example

Chapter 8. Troubleshooting

Introduction

NOTICE

NO maintenance is allowed on the actuator. Users may not clean or tamper with the actuator unless specified by Woodward.

Anti-tamper compound has been installed in the heads of the screws indicated in Figures 8-1, 8-2, 8-3, and 8-4 to prevent tampering with the actuator. There are no user-serviceable items accessible with removal of the screws coated with anti-tamper compound. Removing any of these fasteners without Woodward consultation and approval will result in voiding of the product warranty.

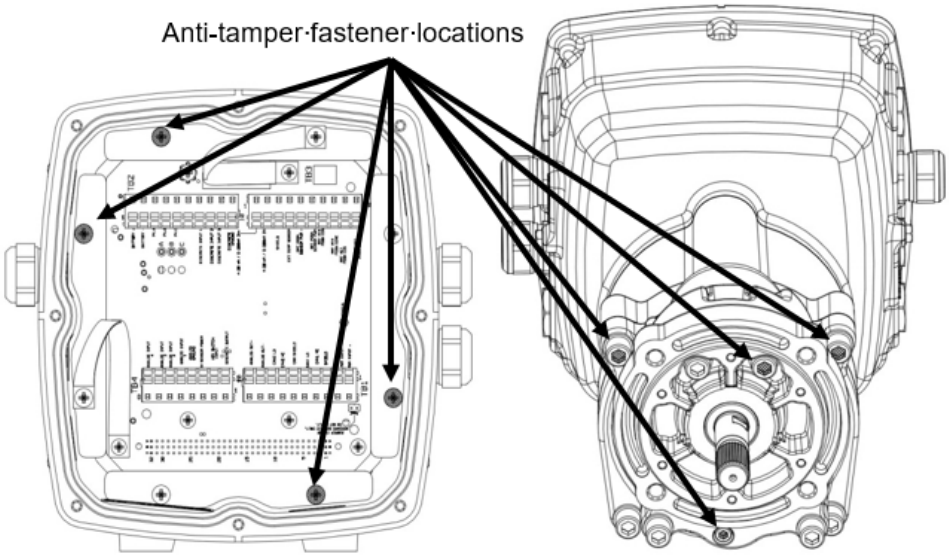

Figure 8-1. R-11 and R-30 Anti-Tamper Screw Locations

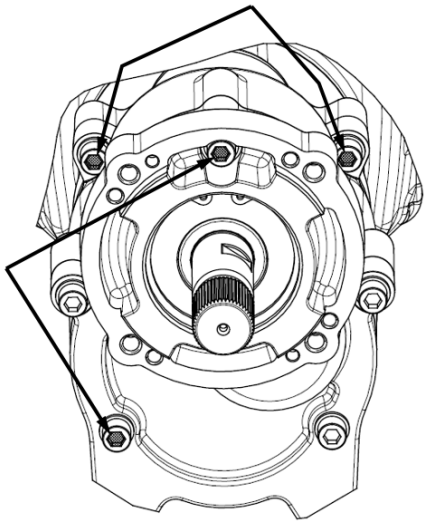

Figure 8-2. R-120 Anti-Tamper Screw Locations

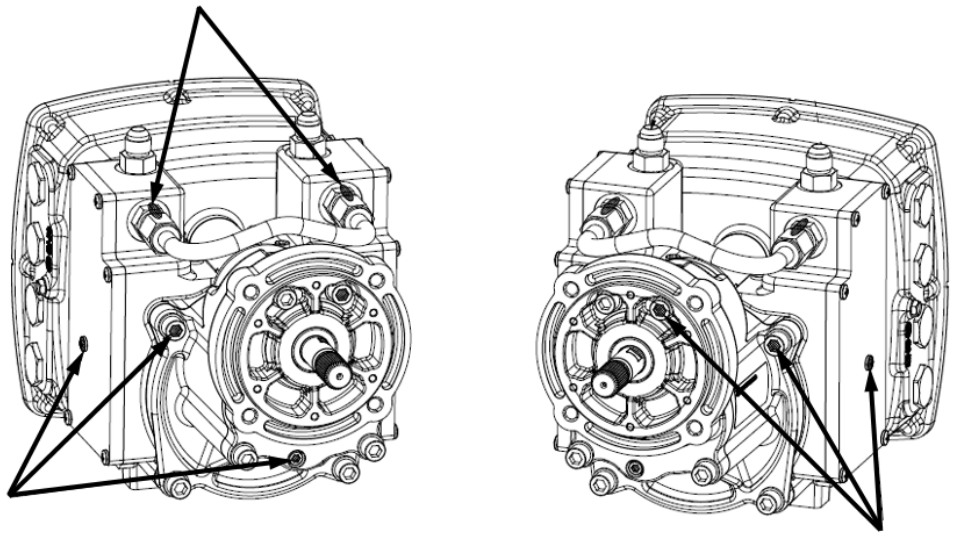

Figure 8-3. R-11AC and R-30AC Anti-Tamper Screw Locations

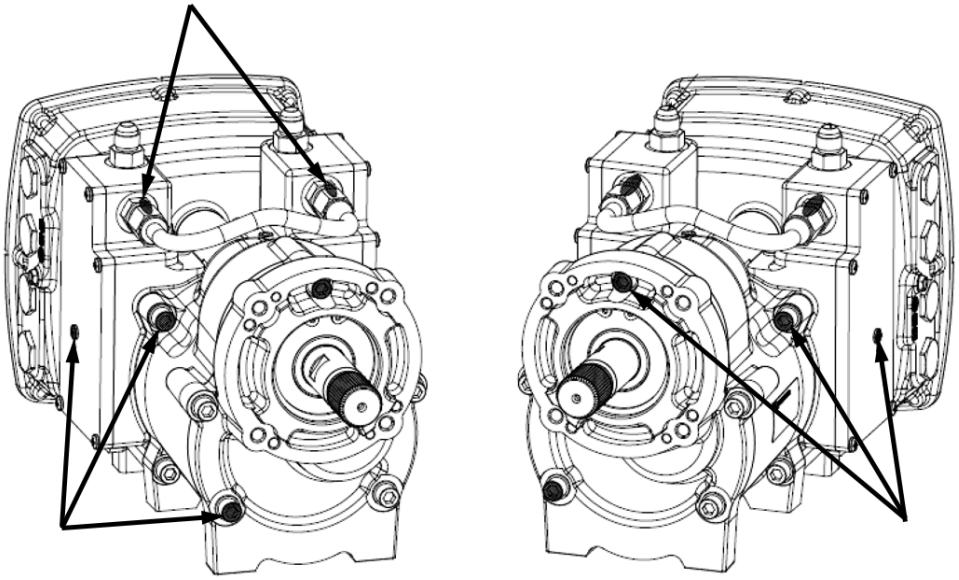

Figure 8-4. R-120AC Anti-Tamper Screw Locations

This chapter presents several broad categories of application failures typically experienced in the field, possible causes, and some tests used to verify the causes. Because the exact failure experienced in the field is the product of the mechanical/electrical failure combined with the configuration file resident in the control, it is left as the OEM's responsibility to create a more detailed troubleshooting chart for the end user. Ideally, this end-user troubleshooting chart will contain information about mechanical, electrical, engine, and load failures in addition to the possible actuator failures.

The troubleshooting scenarios listed below assume that the end user has a digital multi-meter at his disposal for testing voltages and checking continuity, and that the application has been engineered and tested thoroughly.

There are four parts to the troubleshooting section:

- General Troubleshooting
- Engine/Generator Troubleshooting
- Input/Output (I/O) Troubleshooting

WARNING

Overspeed

The engine, turbine, or other type of prime mover should be equipped with an overspeed shutdown device to protect against runaway or damage to the prime mover with possible personal injury, loss of life, or property damage.

The overspeed shutdown device must be totally independent of the prime mover control system. An over temperature or overpressure shutdown device may also be needed for safety, as appropriate.

WARNING

Personal Injury

The actions described in this troubleshooting section are not always appropriate in every situation. Always make sure that any action taken will not result in loss of equipment, personal injury, or loss of life.

WARNING

Personal Injury

HEARING PROTECTION—Due to typical noise levels in engine environments, hearing protection should be worn when working on or around the R-Series actuator.

WARNING

Personal Injury

HOT SURFACES—The surface of this product can become hot enough or cold enough to be a hazard. Use protective gear for product handling in these circumstances. Temperature ratings are included in the specification section of this manual.

General System Troubleshooting Guide

The following is a general troubleshooting guide for areas to check which may present potential difficulties. By making these checks appropriate to your engine/turbine before contacting Woodward for technical assistance, your system problems can be more quickly and accurately assessed.

- Is the wiring correct?
- Is the direction of the stroke correct?
- Is the direction of the failsafe shutdown correct?
- Does the linkage/valve move through its proper stroke smoothly?
- Does the linkage/valve travel its full stroke?
- Can mid-stroke be obtained and held?
- Does the valve fully seat (closed)?
- Does the valve fully open?

Engine/Generator Troubleshooting

Table 8-1 below provides possible causes of engine/generator issues and suggests corrections.

Table 8-1. Engine/Generator Troubleshooting

Problem	Possible Cause	Suggested Test/Correction
Engine does not start.	Power not applied to control	Test for +24 V between power input and ground on terminal block.
	Incorrect configuration in control	Verify the configuration using the Service Tool.
	Stuck throttle/frozen shaft	Move throttle by hand. Assess smoothness, friction, and return spring force.
	Incorrect configuration in control	Using Service Tool, read configuration from control and evaluate parameters for correction.
	Fault detected in control	Using Service Tool, read faults from control. Verify/correct any shutdown conditions.
The actuator is not opening the control valve during engine cranking.	No command input is present at the actuator.	Verify Command input from controller.
	The control is configured for the wrong opening direction.	Check linkage setup. Check device configuration.
	The control has detected a shutdown situation and has not been reset.	Execute a ‘reset command’ to clear the faults. Verify configuration selection, latching vs non-latching faults.
	There is no power supplied to the control.	Check fuse, wiring, and battery voltage.
	Fault detected in control.	Using Service Tool, read faults from control. Verify/correct any shutdown conditions.
The engine overspeeds on start-up.	The control is setup for the wrong opening direction.	Check linkage setup and device configuration.
	Speed setting too high within the controlling speed control.	Verify speed control setpoint. The setpoint should be in the ECM or the independent speed controller.
	Improper configured valve position relative to command input.	Verify valve command configuration.
	An overshoot in speed is caused by speed control.	Speed control dynamic settings or acceleration ramp rate are overly responsive. Tune the speed control. settings in the ECM or the independent speed controller.
	The overspeed trip level is set incorrectly.	Verify the overspeed trip setting in the ECM or the independent speed controller.
Engine starts but shuts down on error.	Error detected by control.	Verify the exact cause of the error using the Service Tool.

Table 8-1. Engine/Generator Troubleshooting (cont'd.)

Problem	Possible Cause	Suggested Test/Correction
Unable to develop full power.	Non-indexed linkage slipped on shaft	Manually verify full travel of throttle plate.
	Improper configured valve position relative to command input	Verify position if possible.
	Fault detected in control	Using Service Tool, view status of fault codes. Take appropriate action for active faults.
Not controlling at desired position setpoint.	PWM input signal inaccuracy	Measure input duty cycle and convert to percentage. Verify controller signal.
	Wiring fault or ground loop	Check the wiring. Look for loose connections and disconnected or misconnected cables and connections. Remove all wiring except the position command and power input and verify operation/functionality.
	Analog input signal inaccuracy	As applicable, measure the analog command current to verify that it is at the expected value in the range of 20 mA to 180 mA or 4 mA to 20 mA.
	Output shaft is bound or sticking	Move output shaft by hand. Assess smoothness, friction, and return spring force.
	PWM input frequency is too high	Measure PWM command frequency. Verify it is within frequency range.
Discrete output not working.	Wiring fault	Check the wiring leading to TB4-1 for open connections or misconnections. Verify that TB4-1 is not connected directly to input power or ground.
	Configuration	Using the Service Tool, verify configuration of the discrete output, both type and source. Verify the fault actions are selected properly and that the output is configured for expected operation (either normally "on" or normally "off").
Power supply fluctuation (if using a switching power supply instead of battery power).	Flyback energy on the Batt(+) input can interfere with some switching power sources.	Add a forward-biased power diode in series with the Batt(+) input of the R-Series. Use at least a 6 A, fast recovery diode.
Actuator is oscillating positions.	Command input current is over maximum limit.	Verify the wiring and the sources for the current command input.
Actuator is not positioning as expected.	Power was applied to the actuator before the discrete inputs were connected.	Verify device configuration using the Service Tool. Troubleshoot input signals and faults using the Service Tool.

Table 8-1. Engine/Generator Troubleshooting (cont'd.)

Problem	Possible Cause	Suggested Test/Correction
Service Tool not communicating– 'connecting' status indicated	Power not applied to control	Disconnect harness from actuator. Test for +24 V between power input and ground on terminal block.
	Wiring fault	Check for loose or misconnected wiring connections. Verify harness setup and connections.
	Incorrect cable used or converter missing	USB-to-CAN converter and interconnect cable required. See Chapters 3 & 6 for details.
	Service Tool is disconnected	Check that Service Tool is running. Check fuse, wiring, and battery voltage. Connect the Service Tool by using the connect icon or 'Device Connect' menu selection.
	Incorrect communication port settings	Verify the port setting is correct. Verify data rate and command/response Ids are correct.
	Device CAN port settings or hardware issu.	Try using CAN2 (see Chapter 6 for details).
Service Tool not communicating– 'Error message displayed on PC when trying to connect.	Old version of Service Tool or file corruption or bad install.	Re-install Service Tool. Get the latest version from the Woodward web site (www.woodward.com/software).

Troubleshooting Diagnostic Fault Flags

Table 8-2. Diagnostic Fault Flags

Error Flag	Description	Possible Source	Possible Action
Analog Input High	The analog input is higher than the configured diagnostic limits.	Analog input is driven outside of the diagnostic high limit.	Check signal and fix incorrect signal level.
		Diagnostic limit is setup incorrectly.	Set correct diagnostic limit in the actuator.
		Analog wiring is shorted to a power source like the battery plus.	Correct wiring problem.
Analog Input Low	The analog input is lower than the configured diagnostic limits.	Analog input is driven outside of the diagnostic low limit.	Check signal and fix incorrect signal level.
		Diagnostic limit is set up incorrectly.	Set correct diagnostic limit in the actuator.
		Analog wiring is shorted to a low signal like battery minus.	Correct wiring problem.
		Analog signal wiring is lost.	Correct wiring connection.
		Analog input current is above over-current protection circuit, circuit is opened by actuator protection circuit.	Check signal and fix incorrect signal level.
Input Voltage High	The power supply voltage is higher than the configured diagnostic limits.	Bad or damaged battery	Replace battery.
		Defective battery charging system	Fix battery charging system.
		Incorrect settings of power supply voltage level	Set correct voltage levels on power supply.
Input Voltage Low	The Power supply voltage is lower than the configured diagnostic limits.	Defective battery charging system	Fix battery charging system.
		Power supply wiring too long or too thin. Control will flag low voltage during higher power uses.	Make sure wiring is of the correct thickness and length according to manual.
		Incorrect setting of power supply voltage levels	Set correct voltage levels on power supply.
Electronics Temperature High	The temperature inside the control is higher than allowed by specifications.	Actuator has been placed in an environment that is too hot.	Lower temperature by adding cooling, heat shielding, moving the unit, etc.
		The internal temperature sensor is defective. Check the temperature of the unit and compare this to the Service Tool value of the electronics temperature to determine this.	Return unit to Woodward for repair.

Table 8-2. Diagnostic Fault Flags (cont'd.)

Error Flag	Description	Possible Source	Possible Action
Electronics Temperature Low	The temperature inside the control is lower than allowed by specifications.	Actuator has been placed in an environment that is too cold.	Increase temperature by adding heat.
		The internal temperature sensor is defective. Check the temperature of the unit and compare this to the Service Tool value of the electronics temperature to determine this.	Return unit to Woodward for repair.
Position Error	Indicates demanded position and the actual position are outside hard coded diagnostic limits.	Binding or excessive friction in the actuator linkage, or stops are set inside the desired range of travel.	Check all mechanical linkages and stops.
Torque Derating Active	The internally monitored electronics temperature has exceeded 118 °C. Performance may be reduced.	High device temperature.	Monitor temperature using the Service Tool. Verify reasonable value as compared to ambient temperature of the device. Provide cooling for device.
		Possible failed or intermittent temperature sensor	Return unit to Woodward for repair.
Zero Torque Fault	The internally monitored electronics temperature has exceeded 125 °C. Drive current is zero/limp.	High device temperature.	Monitor temperature using the Service Tool. Verify reasonable value as compared to ambient temperature of the device. Provide cooling for device.
		Possible failed or intermittent temperature sensor	Return unit to Woodward for repair.
Demand Tracking Error	The configured demand signals are not tracking each other within the configured tolerances.	Incorrect configuration. Inputs invalid or failed.	Check configuration of demand tracking.
		Demand signals not matching, incorrectly sent, or scaling problem.	Verify demand inputs in Service Tool. Make sure they are tracking each other.
		Device not sending demand signals that track each other.	Correct signals to ensure they track within configured limits.
		Incorrect configuration.	Verify configuration. Check demand tracking settings.

Table 8-2. Diagnostic Fault Flags (cont'd.)

Error Flag	Description	Possible Source	Possible Action
Loss of Position Demand	All configured position demand signals have been detected as out of range or failed.	Incorrect configuration.	Check configuration of demand selection.
		Inputs invalid or failed.	Check troubleshooting of each input below (e.g., PWM Input Fault)
PWM Duty Cycle High	The PWM Duty Cycle is higher than the configured diagnostic limits.	PWM Duty Cycle is driven outside of the diagnostic high limit.	Check signal and fix incorrect signal level.
		Diagnostic limit is setup incorrectly.	Set correct diagnostic limit in the actuator.
PWM Duty Cycle Low	The PWM Duty Cycle is Lower than the configured diagnostic limits.	PWM Duty Cycle is driven outside of the diagnostic low limit. Incorrect or intermittent wiring problem.	Check signal and fix incorrect signal level.
		Diagnostic limit is setup incorrectly.	Set correct diagnostic limit in the actuator.
CANbus Off	The CAN port is detected in the Bus Off condition.	Incorrect or intermittent wiring problem.	Check wiring for broken or loose connection.
		Incorrect or missing termination resistors.	Verify proper termination resistors at the ends of the CAN network.
		Electrical problems within the controller or unit.	Possible problem with the actuator, although additional testing recommended before returning to Woodward.
J1939 Address Claim Error	This J1939 fault is set if the control's address cannot be claimed on the CANbus.	Another unit on the bus with the same id with a higher priority.	Verify correct CAN ID discrete input state, and unit number selection. Verify Source Addresses of units communicating on the bus, resolve conflict.
		No other units on the CANbus.	Verify CANbus communication and connections. Check wiring for broken or loose connection.
		CAN wiring problem.	Check the CAN wiring for shorts, open connections, interchanged connections, and intermittent contacts.

Table 8-2. Diagnostic Fault Flags (cont'd.)

Error Flag	Description	Possible Source	Possible Action
CAN Demand Fault	The CAN demand value received was detected above 100% (0x9C40).	CAN demand is missing (no signal) or is too slow (slower than the Demand Timeout setting), or the value received is above 0xFAFF	Verify correct configuration (demand timeout). Verify CANbus communication and connections.
		Incorrect R-Series Number	Check the CAN ID inputs to the valve.
		ECM is not sending Demand messages or is not sending to the correct R-Series number.	Verify that the ECM is powered up and sending valid demand messages, and that the correct actuator ID numbers are selected.
		CAN termination problem	Check if the CANbus has the right termination resistor connected at both ends of the bus.
		CAN wiring problem	Check the CAN wiring for shorts, open connections, interchanged connections, and intermittent contacts.
		CAN noise problem	Verify that the CAN wiring is installed according to the installation instruction
		CANbus incompatibility with ECM, e.g., baud rate	Verify ECM CANbus compatibility.
		CAN traffic overload	Verify that there is not excessive CAN traffic that has higher priority than the actuator demand message.
CAN Demand Out of range	The CAN demand value received was detected above 100% (0x9C40).	Incorrect value sent from ECM.	Verify ECM limits the values sent to the actuator to be within the specified 0–100% range.
		CAN noise problem.	Verify that the CAN wiring is installed according to the installation instruction.
		CAN wiring problem.	Check the CAN wiring for shorts, open connections, interchanged connections, and intermittent contacts.

Table 8-2. Diagnostic Fault Flags (cont'd.)

Error Flag	Description	Possible Source	Possible Action
Shaft Position Sensor Failed	Indicates the internal position sensor is outside hard coded diagnostic limits.	Internal failure of position sensor.	Return unit to Woodward for repair.
Motor Position Sensor Failed	Indicates the internal position sensor is outside hard coded diagnostic limits.	Internal failure of position sensor.	Return unit to Woodward for repair.
Position Sensor (Motor-to-Shaft) Deviation	Indicates two internal position sensors are sensing values that differ by more than the diagnostic limits.	Internal actuator problem. Shaft slip. Gearing issue.	Cycle power. Confirm end-to-end travel. Return unit to Woodward for repair.
Coil Current Error	Indicates device not controlling at commanded values.	Invalid indication. Internal actuator wire break or circuit problem.	Cycle power. Confirm end-to-end travel. Position control is not possible if any wire is broke. Return unit to Woodward for repair.
Configuration Error	The loaded settings file has improper settings.	Invalid or corrupt settings.	Using the Service Tool, check and fix configuration settings and reload them into device.
Nonvolatile Memory Fail	Problem with the data read from internal non-volatile memory.	New software loaded into device. Defective actuator.	Clear fault with reset command. Cycle power. Return unit to Woodward for repair.
Sense 12 V Fault	Internally monitored voltage signal is out of range.	Defective actuator.	Return unit to Woodward for repair.
Discrete Out Low Side Fault	Internal protection detected a short.	Circuit or wiring problem. Possible circuit problem.	Check wiring for shorts, open connections, interchanged connections, and intermittent contacts. Confirm configuration.

Chapter 9
Product Support and Service Options

Product Support Options

If you are experiencing problems with the installation, or unsatisfactory performance of a Woodward product, the following options are available:

1. Consult the troubleshooting guide in the manual.
2. Contact the **OE Manufacturer or Packager** of your system.
3. Contact the **Woodward Business Partner** serving your area.
4. Contact Woodward technical assistance via email (**EngineHelpDesk@Woodward.com**) with detailed information on the product, application, and symptoms. Your email will be forwarded to an appropriate expert on the product and application to respond by telephone or return email.
5. If the issue cannot be resolved, you can select a further course of action to pursue based on the available services listed in this chapter.

OEM or Packager Support: Many Woodward controls and control devices are installed into the equipment system and programmed by an Original Equipment Manufacturer (OEM) or Equipment Packager at their factory. In some cases, the programming is password-protected by the OEM or packager, and they are the best source for product service and support. Warranty service for Woodward products shipped with an equipment system should also be handled through the OEM or Packager. Please review your equipment system documentation for details.

Woodward Business Partner Support: Woodward works with and supports a global network of independent business partners whose mission is to serve the users of Woodward controls, as described here:

- A **Full-Service Distributor** has the primary responsibility for sales, service, system integration solutions, technical desk support, and aftermarket marketing of standard Woodward products within a specific geographic area and market segment.
- An **Authorized Independent Service Facility (AISF)** provides authorized service that includes repairs, repair parts, and warranty service on Woodward's behalf. Service (not new unit sales) is an AISF's primary mission.
- A **Recognized Engine Retrofitter (RER)** is an independent company that does retrofits and upgrades on reciprocating gas engines and dual-fuel conversions, and can provide the full line of Woodward systems and components for the retrofits and overhauls, emission compliance upgrades, long term service contracts, emergency repairs, etc.

A current list of Woodward Business Partners is available at www.woodward.com/local-partner.

Product Service Options

Depending on the type of product, the following options for servicing Woodward products may be available through your local Full-Service Distributor or the OEM or Packager of the equipment system.

- Replacement/Exchange (24-hour service)
- Flat Rate Repair
- Flat Rate Remanufacture

Replacement/Exchange: Replacement/Exchange is a premium program designed for the user who is in need of immediate service. It allows you to request and receive a like-new replacement unit in minimum time (usually within 24 hours of the request), providing a suitable unit is available at the time of the request, thereby minimizing costly downtime.

This option allows you to call your Full-Service Distributor in the event of an unexpected outage, or in advance of a scheduled outage, to request a replacement control unit. If the unit is available at the time of the call, it can usually be shipped out within 24 hours. You replace your field control unit with the like-new replacement and return the field unit to the Full-Service Distributor.

Flat Rate Repair: Flat Rate Repair is available for many of the standard mechanical products and some of the electronic products in the field. This program offers you repair service for your products with the advantage of knowing in advance what the cost will be.

Flat Rate Remanufacture: Flat Rate Remanufacture is very similar to the Flat Rate Repair option, with the exception that the unit will be returned to you in “like-new” condition. This option is applicable to mechanical products only.

Returning Equipment for Repair

If a control (or any part of an electronic control) is to be returned for repair, please contact your Full-Service Distributor in advance to obtain Return Authorization and shipping instructions.

When shipping the item(s), attach a tag with the following information:
- Return number
- Name and location where the control is installed
- Name and phone number of contact person
- Complete Woodward part number(s) and serial number(s)
- Description of the problem
- Instructions describing the desired type of repair

Packing a Control

Use the following materials when returning a complete control:
- Protective caps on any connectors
- Antistatic protective bags on all electronic modules
- Packing materials that will not damage the surface of the unit
- At least 100 mm (4 inches) of tightly packed, industry-approved packing material
- A packing carton with double walls
- A strong tape around the outside of the carton for increased strength

NOTICE

To prevent damage to electronic components caused by improper handling, read and observe the precautions in Woodward manual 82715, *Guide for Handling and Protection of Electronic Controls, Printed Circuit Boards, and Modules*.

Replacement Parts

When ordering replacement parts for controls, include the following information:
- The part number(s) (XXXX-XXXX) that is on the enclosure nameplate
- The unit serial number, which is also on the nameplate.

Engineering Services

Woodward's Full-Service Distributors offer various Engineering Services for our products. For these services, you can contact the Distributor by telephone or by email.

- Technical Support
- Product Training
- Field Service

Technical Support is available from your equipment system supplier, your local Full-Service Distributor, or from many of Woodward's worldwide locations, depending upon the product and application. This service can assist you with technical questions or problem solving during the normal business hours of the Woodward location you contact.

Product Training is available as standard classes at many Distributor locations. Customized classes are also available, which can be tailored to your needs and held at one of our Distributor locations or at your site. This training, conducted by experienced personnel, will assure that you will be able to maintain system reliability and availability.

Field Service engineering on-site support is available, depending on the product and location, from one of our Full-Service Distributors. The field engineers are experienced both on Woodward products as well as on much of the non-Woodward equipment with which our products interface.

For information on these services, please contact one of the Full-Service Distributors listed at www.woodward.com/local-partner.

Contacting Woodward's Support Organization

For the name of your nearest Woodward Full-Service Distributor or service facility, please consult our worldwide directory at www.woodward.com/support, where you may also find the most current product support and contact information.

You can also contact the Woodward Customer Service Department at one of the following Woodward facilities to obtain the address and phone number of the nearest facility at which you can obtain information and service.

Products Used in Electrical Power Systems

Facility	Phone Number
Brazil	+55 (19) 3708 4800
China	+86 (512) 8818 5515
Germany:	+49 (711) 78954-510
India	+91 (124) 4399500
Japan	+81 (43) 213-2191
Korea	+82 (32) 422-5551
Poland	+48 (12) 295 13 00
United States	+1 (970) 482-5811

Products Used in Engine Systems

Facility	Phone Number
Brazil	+55 (19) 3708 4800
China	+86 (512) 8818 5515
Germany	+49 (711) 78954-510
India	+91 (124) 4399500
Japan	+81 (43) 213-2191
Korea	+ 82 (32) 422-5551
The Netherlands	+31 (23) 5661111
United States	+1 (970) 482-5811

Products Used in Industrial Turbomachinery Systems

Facility	Phone Number
Brazil	+55 (19) 3708 4800
China	+86 (512) 8818 5515
India	+91 (124) 4399500
Japan	+81 (43) 213-2191
Korea	+ 82 (32) 422-5551
The Netherlands	+31 (23) 5661111
Poland	+48 (12) 295 13 00
United States	+1 (970) 482-5811

Technical Assistance

If you need to contact technical assistance, you will need to provide the following information. Please write it down here before contacting the Engine OEM, the Packager, a Woodward Business Partner, or the Woodward factory:

General

Your Name

Site Location

Phone Number

Fax Number

Prime Mover Information

Manufacturer

Engine Model Number

Number of Cylinders

Type of Fuel (gas, gaseous, diesel, dual-fuel, etc.)

Power Output Rating

Application (power generation, marine, etc.)

Control/Governor Information

Control/Governor #1

Woodward Part Number & Rev. Letter

Control Description or Governor Type

Serial Number

Control/Governor #2

Woodward Part Number & Rev. Letter

Control Description or Governor Type

Serial Number

Control/Governor #3

Woodward Part Number & Rev. Letter

Control Description or Governor Type

Serial Number

Symptoms

Description

If you have an electronic or programmable control, please have the adjustment setting positions or the menu settings written down and with you at the time of the call.

Appendix A. Acronyms/Abbreviations

AUX	Auxiliary
BLDC	Brush-Less Direct Current
CAN	Controller area network
CCW	Counterclockwise
CRC	Cyclic redundancy check
CW	Clockwise
DA	Destination Address
DM	Diagnostic Message
ECM	Engine Control Module
ECU	Engine Control Unit
EEPROM	Electrically erasable programmable read-only memory
EMC	Electromagnetic compatibility
FMI	Failure Mode Identification
GUI	Graphic user interface
I/O	Inputs/outputs
ITB	Integrated throttle body
LED	Light emitting diode
MWP	Maximum working pressure
NID	Node ID
OEM	Original equipment manufacturer
PC	Personal computer
PDU	Protocol Data Unit
PF	PDU Format
PGN	Parameter Group Number
PS	PDU Specific
PWM	Pulse-width modulated
RO	Read-Only
RS-232	A communications standard
RW	Read-Write
S16	Signed 16-bit value
SA	Source Address
SD	Shut Down
SID	Service interface definition
SPI A/D	Serial peripheral interface analog/digital
SPI D/A	Serial peripheral interface digital/analog
SPN	Suspect Parameter Number
TB	Terminal Block
TB2-1	Terminal Block 2 – Position 1
TPS	Throttle position sensor
USB	Universal Serial Bus
U32	Un-signed 32-bit value
WO	Write-Only

Appendix B.
SAE J1939 Profiles

The SAE J1939 protocol defines many SPNs (Suspect Parameter Numbers) and PGNs (Parameter Group Numbers) in part 71 for engine applications. Finding the relevant ones for a given application can take time. For convenience, the common applications for an R-Series are summarized here along with the correct way to configure the device to use these public messages.

J1939 Configuration Example

This example is provided to aid in understanding the relationship of the settings to the J1939 standard. There are two main J1939 components to set up in the R-Series, the unit identification (ACL NAME) and the data (SPN)/messages (PGN).

Unit Identification Settings
(Address Claimed Message NAME, PGN 60928)

A device's name must be unique; no two devices may share the same name on a vehicle network. The R-Series provides four configurable components of the address claimed name data: the source address, function field, function instance, and ECU instance. The remaining components are fixed values that cannot be changed.

For convenience, the J1939 common actuator definitions are repeated below. The J1939 standard is updated frequently so the information provided below may not represent the latest however SAE is careful to allow backward compatibility.

Source Address:

18 (Fuel System)	May be used with Function 15
34 (aux valve control or engine air system valve)	May be used with Function 142, 143, 147, or 148

Function Field:

15	Fuel System - Controls fuel flow from the tank to the filter to the engine and back
142	Turbocharger Compressor Bypass
143	Turbocharger Wastegate
144	Throttle
146	Fuel Actuator (Rack Actuator)
147	Engine Exhaust Gas Recirculation
148	Engine Exhaust Backpressure
255	Unspecified

Function Instance: A value of 0 corresponds to 'first', and a value of 1 would be used for the second instance. When multiple actuators of the same type are used to control multiple of the same type of device, then each must have a unique Function (The first instance relates to the Left bank or first in the flow path).

ECU Instance: A value of 0 corresponds to 'first', and a value of 1 would be used for the second instance. When multiple actuators of the same type are used to control the same device, then each must have a unique ECU Instance.

Configuration of these settings is provided on the J1939 General Configuration screen of the Service Tool (see Figure 7-8).

Message Setup

The SAE J1939 standard defines the message (PGN) and its content (SPNs). The R-Series provides data values (like actual position) that can be enabled/disabled, placed in appropriate PGNs, and the data locations (start bit) may be defined. In addition, the message priority and transmission rate are configurable. This scheme provides fully-configurable messaging with predefined data.

Figure B-1 shows how the components from the standard are mapped to the configuration tool settings for the position command message [Input (Rx)].

(R) PGN 64931 Electronic Engine Controller 6 ***EEC6***

Engine related parameters

Transmission Repetition Rate:	100 msec (preferred) or Engine Speed Dependent (if required by application)
Data Length:	8
Extended Data Page:	0
Data Page:	0
PDU Format:	253
PDU Specific:	163 PGN Supporting Information:
Default Priority:	4
Parameter Group Number:	64931 (0x00FDA3)

Start Position	Length	Parameter Name	SPN
1-2	2 bytes	Engine Turbocharger Compressor Bypass Actuator 1 Command	3470
3	1 byte	Engine Variable Geometry Turbocharger Actuator #1	641
4	1 byte	Engine Turbocharger Compressor Bypass Actuator 1 Position	3675
5-6	2 bytes	Engine Turbocharger Compressor Bypass Actuator 2 command	5369
7	1 byte	Engine Desired Turbocharger Compressor Bypass Actuator 1 Position	5366
8.1	5 bits	Engine Turbocharger Compressor Bypass Actuator 1 Preliminary FMI	5367
8.6	3 bits	Engine Turbocharger Compressor Bypass Actuator 1 Temperature Status	5368

Rx Message Setup

	Size	SPN	Enable	PGN	Start Bit
Position Command	16-bit	3470		64931	1.1
Run/Stop Command	2-bit		☐	65312	6.1

Figure B-1. Mapping Commands (Received Data) Example

Figure B-2 shows how the components from the standard are mapped to the configuration tool settings for the actual position reported [Output (Tx)]. Other components are similar.

(R) PGN 64931 Electronic Engine Controller 6 ***EEC6***

Engine related parameters

Transmission Repetition Rate:	100 msec (preferred) or Engine Speed Dependent (if required by application)
Data Length:	8
Extended Data Page:	0
Data Page:	0
PDU Format:	253
PDU Specific:	163 PGN Supporting Information:
Default Priority:	4
Parameter Group Number:	64931 (0x00FDA3)

Start Position	Length	Parameter Name	SPN
1-2	2 bytes	Engine Turbocharger Compressor Bypass Actuator 1 Command	3470
3	1 byte	Engine Variable Geometry Turbocharger Actuator #1	641
4	1 byte	Engine Turbocharger Compressor Bypass Actuator 1 Position	3675
5-6	2 bytes	Engine Turbocharger Compressor Bypass Actuator 2 command	5369
7	1 byte	Engine Desired Turbocharger Compressor Bypass Actuator 1 Position	5366
8.1	5 bits	Engine Turbocharger Compressor Bypass Actuator 1 Preliminary FMI	5367
8.6	3 bits	Engine Turbocharger Compressor Bypass Actuator 1 Temperature Status	5368

Tx Message Setup

	Size	SPN	Enable	PGN	Start Bit	Priority	Rate
Actual Position	8-Bit	3675	☑	64931	4.1 (8-bit)	4	100 ms
Desired Position	8-bit		☑	64931	7.1	4	100 ms
Prelim FMI & Temp Status	8-bit		☑	64931	8.1	4	100 ms
Operation Status	4-bit		☑	64755	4.1	6	100 ms
Control Mode Status	4-bit		☐	65312	5.1	6	1 s
Diagnostic Bit Field	32-bit		☐	65312	1.1	6	1 s
Electronic Temperature	8-bit	5791	☑	64755	5.1	6	100 ms
Actuator Output Parameters	64-bit		☐	65313		6	100 ms
R-Series Device		5419					

Figure B-2. Mapping Transmitted Data Example

The Turbocharger Compressor Bypass Actuator defined in J1939 has two instances (normally for left and right bank) already defined in the standard. The tables below summarize which PGNs and SPNs relate to these actuators. The Byte Location, Priority, and Rate as well as the NAME components are provided as defined in the standard to aid configuration.

Table B-1. Turbocharger Compressor Bypass Instance 1

Turbocharger Compressor Bypass Instance 1

PGN	SPN	Name	Byte	Priority	Rate
64931	3470	Engine Turbo Compressor Bypass Actuator 1 Control Command	1.1	Rcv	Rcv
64931	3675	Engine Turbo Compressor Bypass Actuator 1 Position (8-bit)	4.1	4	100 ms
64931	5366	Engine Turbo Compressor Bypass Actuator 1 Desired Position	7.1	4	100 ms
64931	5367	Engine Turbo Compressor Bypass Actuator 1 Preliminary FMI	8.1	4	100 ms
64931	5368	Engine Turbo Compressor Bypass Actuator 1 Temperature Status	8.6	4	100 ms
64755	5449	Engine Turbo Compressor Bypass Actuator 1 Operation Status	4.1	6	100 ms
64755	5791	Engine Turbo Compressor Bypass Actuator 1 Temperature	5.1	6	100 ms

Table B-2. Turbocharger Compressor Bypass Instance 2

Turbocharger Compressor Bypass Instance 2

PGN	SPN	Name	Byte	Priority	Rate
64931	5369	Engine Turbo Compressor Bypass Actuator 2 Control Command	5.1	Rcv	Rcv
64755	5388	Engine Turbo Compressor Bypass Actuator 2 Position (8-bit)	1.1	6	100 ms
64755	5389	Engine Desired Turbo Compressor Bypass Actuator 2 Position	2.1	6	100 ms
64755	5390	Engine Turbo Compressor Bypass Actuator 2 Preliminary FMI	3.1	6	100 ms
64755	5391	Engine Turbo Compressor Bypass Actuator 2 Temperature Status	3.6	6	100 ms
64755	5450	Engine Turbo Compressor Bypass Actuator 2 Operation Status	4.5	6	100 ms
64755	5792	Engine Turbo Compressor Bypass Actuator 2 Temperature	6.1	6	100 ms

NAME Component	Instance 1	Instance 2
Function Field	142	142
Function Instance	0	1
ECU Instance	0	0
Source Address	34	34
Device SPN	5420	NA

Turbocharger Wastegate

The Turbocharger Wastegate Actuator defined in J1939 has two instances (normally for left and right bank) already defined in the standard. The tables below summarize which PGNs and SPNs relate to these actuators. The Byte Location, Priority, and Rate as well as the NAME components are provided as defined in the standard to aid configuration.

Table B-3. Turbocharger Wastegate Instance 1

Turbocharger Wastegate Instance 1

PGN	SPN	Name	Byte	Priority	Rate
61486	5386	Engine Turbocharger Wastegate Actuator 1 Control Command	1.1	Rcv	Rcv
65174	1188	Engine Turbocharger Wastegate Actuator 1 Position (8-bit)	1.1	6	100 ms
65174	5370	Engine Turbocharger Wastegate Actuator 1 Desired Position	6.1	6	100 ms
65174	5371	Engine Turbocharger Wastegate Actuator 1 Preliminary FMI	7.1	6	100 ms
65174	5372	Engine Turbocharger Wastegate Actuator 1 Temperature Status	7.6	6	100 ms
64753	5451	Engine Turbocharger Wastegate Actuator 1 Operation Status	2.1	6	100 ms
64753	5788	Engine Turbocharger Wastegate Actuator 1 Temperature	6.1	6	100 ms

Table B-4. Turbocharger Wastegate Instance 2

Turbocharger Wastegate Instance 2

PGN	SPN	Name	Byte	Priority	Rate
61486	5387	Engine Turbocharger Wastegate Actuator 2 Control Command	3.1	Rcv	Rcv
65174	1189	Engine Turbocharger Wastegate Actuator 2 Position (8-bit)	2.1	6	100 ms
65174	5373	Engine Desired Turbocharger Wastegate Actuator 2 Position	8.1	6	100 ms
64753	5384	Engine Turbocharger Wastegate Actuator 2 Preliminary FMI	1.1	6	100 ms
64753	5385	Engine Turbocharger Wastegate Actuator 2 Temperature Status	1.6	6	100 ms
64753	5452	Engine Turbocharger Wastegate Actuator 2 Operation Status	2.5	6	100 ms
64713	5787	Engine Turbocharger Wastegate Actuator 2 Temperature	5.1	6	100 ms

NAME Component	Instance 1	Instance 2
Function Field	143	143
Function Instance	0	1
ECU Instance	0	0
Source Address	34	34
Device SPN	5421	NA

Throttle

The Throttle Valve Actuator defined in J1939 has two instances (normally for left and right bank) already defined in the standard. The tables below summarize which PGNs and SPNs relate to these actuators. The Byte Location, Priority, and Rate as well as the NAME components are provided as defined in the standard to aid configuration.

Table B-5. Throttle Instance 1

Throttle Instance 1

PGN	SPN	Name	Byte	Priority	Rate
61466	3464	Engine Throttle Valve 1 Control Command	1.1	Rcv	Rcv
65266	51	Engine Throttle Valve 1 Position (8-bit)	7.1	6	100 ms
64754	5374	Engine Desired Throttle Valve 1 Position	1.1	6	100 ms
64754	5375	Engine Throttle Valve 1 Preliminary FMI	2.1	6	100 ms
64754	5376	Engine Throttle Valve 1 Temperature Status	2.6	6	100 ms
64754	5445	Engine Throttle Valve 1 Operation Status	7.1	6	100 ms
64713	5783	Engine Throttle Valve 1 Temperature	1.1	6	100 ms

Table B-6. Throttle Instance 2

Throttle Instance 2

PGN	SPN	Name	Byte	Priority	Rate
61466	3465	Engine Throttle Valve 2 Control Command	3.1	Rcv	Rcv
65266	3673	Engine Throttle Valve 2 Position (8-bit)	8.1	6	100 ms
64754	5377	Engine Desired Throttle Valve 2 Position	3.1	6	100 ms
64754	5378	Engine Throttle Valve 2 Preliminary FMI	4.1	6	100 ms
64754	5379	Engine Throttle Valve 2 Temperature Status	4.6	6	100 ms
64754	5446	Engine Throttle Valve 2 Operation Status	7.5	6	100 ms
64713	5784	Engine Throttle Valve 2 Temperature	2.1	6	100 ms

NAME Component	Instance 1	Instance 2
Function Field	144	144
Function Instance	0	1
ECU Instance	0	0
Source Address	34	34
Device SPN	5419	NA

Gaseous Fuel Valve

The Fuel Valve Actuator defined in J1939 has two instances (normally for left and right bank) already defined in the standard. The tables below summarize which PGNs and SPNs relate to these actuators. The Byte Location, Priority, and Rate as well as the NAME components are provided as defined in the standard to aid configuration.

Table B-7. Gas Fuel Valve Instance 1

Gas Fuel Valve Instance 1

PGN	SPN	Name	Byte	Priority	Rate
61466	633	Engine Fuel Valve 1 Control Command	5.1	Rcv	Rcv
65153	1442	Engine Fuel Valve 1 Position	5.1	7	Req
65153	1765	Engine Fuel Valve 1 Desired Position	7.1	7	Req
64754	5380	Engine Fuel Valve 1 Preliminary FMI	5.1	6	100 ms
64754	5381	Engine Fuel Valve 1 Temperature Status	5.6	6	100 ms
64754	5447	Engine Fuel Valve 1 Operation Status	8.1	6	100 ms
64713	5785	Engine Fuel Valve 1 Temperature	3.1	6	100 ms

Table B-8. Gas Fuel Valve Instance 2

Gas Fuel Valve Instance 2

PGN	SPN	Name	Byte	Priority	Rate
61466	1244	Engine Fuel Valve 2 Control Command	7.1	Rcv	Rcv
65153	1443	Engine Fuel Valve 2 Position	6.1	7	Req
65153	1766	Engine Desired Fuel Valve 2 Position	8.1	7	Req
64754	5382	Engine Fuel Valve 2 Preliminary FMI	6.1	6	100 ms
64754	5383	Engine Fuel Valve 2 Temperature Status	6.6	6	100 ms
64754	5448	Engine Fuel Valve 2 Operation Status	8.5	6	100 ms
64713	5786	Engine Fuel Valve 2 Temperature	4.1	6	100 ms

NAME Component	Instance 1	Instance 2
Function Field	146	146
Function Instance	0	1
ECU Instance	0	0
Source Address	18	18
Device SPN	5418	NA

Fuel Rack Actuator

The Fuel Rack Actuator defined in J1939 has a single instance already defined in the standard. The tables below summarize which PGNs and SPNs relate to this actuator. The Byte Location, Priority, and Rate as well as the NAME components are provided as defined in the standard to aid configuration.

Table B-9. Fuel Rack Actuator

PGN	SPN	Name	Byte	Priority	Rate
61466	633	Engine Fuel Actuator 1 Control Command	5.1	4	Rcv
65153	1442	Engine Fuel Actuator 1 Position (8-bit)	5.1	7	Req
65153	1765	Engine Desired Fuel Actuator 1 Position	7.1	7	Req
64754	5380	Engine Fuel Actuator 1 Preliminary FMI	5.1	6	100 ms
64754	5381	Engine Fuel Actuator 1 Temperature Status	5.6	6	100 ms
64754	5447	Engine Fuel Actuator 1 Operation Status	8.1	6	100 ms

NAME Component	Instance 1
Function Field	15
Function Instance	0
ECU Instance	0
Source Address	18
Device SPN	834

Exhaust Backpressure Actuator

The Exhaust Backpressure Actuator defined in J1939 has a single instance already defined in the standard. The tables below summarize which PGNs and SPNs relate to this actuator. The Byte Location, Priority, and Rate as well as the NAME components are provided as defined in the standard to aid configuration.

Table B-10. Exhaust Backpressure Actuator

PGN	SPN	Name	Byte	Priority	Rate
61486	649	Engine Exhaust Back Pressure Control Command	1.1	Rcv	Rcv
64753	5625	Engine Exhaust Back Pressure Actuator 1 Position (8-bit)	3.1	6	100 ms
64753	5789	Engine Exhaust Back Pressure Actuator 1 Desired Position	7.1	6	100 ms
64753	5626	Engine Exhaust Back Pressure Actuator 1 Preliminary FMI	4.1	6	100 ms
64753	5627	Engine Exhaust Back Pressure Actuator 1 Temperature Status	4.6	6	100 ms
64753	5628	Engine Exhaust Back Pressure Actuator 1 Operation Status	5.1	6	100 ms
64753	5790	Engine Exhaust Back Pressure Actuator 1 Temperature	8.1	6	100 ms

EGR Actuator

The EGR (Exhaust Gas Recirculation) Actuator defined in J1939 has four instances already defined in the standard. The tables below summarize which PGNs and SPNs relate to these actuators. The Byte Location, Priority, and Rate as well as the NAME components are provided as defined in the standard to aid configuration. Note that for EGR the actual position feedback is a 16-bit value, this is configurable as 8-bit or 16-bit in the R-Series (the EGR actuator is unique compared to all others in J1939).

Table B-11. EGR Actuator Instance 1

EGR Actuator Instance 1

PGN	SPN	Name	Byte	Priority	Rate
64981	2791	Engine EGR 1 Actuator 1 Control Command	5.1	Rcv	Rcv
64916	27	Engine EGR 1 Actuator 1 Position (16-bit)	1.1	6	100 ms
64715	5763	Engine EGR 1 Actuator 1 Preliminary FMI	1.1	6	100 ms
64715	5764	Engine EGR 1 Actuator 1 Temperature Status	1.6	6	100 ms
64715	5765	Engine EGR 1 Actuator 1 Temperature	2.1	6	100 ms
64715	5766	Engine EGR 1 Actuator 1 Desired Position	3.1	6	100 ms
64715	5771	Engine EGR 1 Actuator 1 Operation Status	7.1	6	100 ms

Table B-12. EGR Actuator Instance 2

EGR Actuator Instance 2

PGN	SPN	Name	Byte	Priority	Rate
64879	3821	Engine EGR 1 Actuator 2 Control Command	1.1	Rcv	Rcv
64916	3822	Engine EGR 1 Actuator 2 Position (16-bit)	3.1	6	100 ms
64715	5767	Engine EGR 1 Actuator 2 Preliminary FMI	4.1	6	100 ms
64715	5768	Engine EGR 1 Actuator 2 Temperature Status	4.6	6	100 ms
64715	5769	Engine EGR 1 Actuator 2 Temperature	5.1	6	100 ms
64715	5770	Engine EGR 1 Actuator 2 Desired Position	6.1	6	100 ms
64715	5772	Engine EGR 1 Actuator 2 Operation Status	7.5	6	100 ms

Table B-13. EGR Actuator Instance 4

EGR Actuator Instance 3

PGN	SPN	Name	Byte	Priority	Rate
64762	5264	Engine EGR 2 Actuator 1 Control Command	1.1	Rcv	Rcv
64765	5262	Engine EGR 2 Actuator 1 Position (16-bit)	1.1	4	100 ms
64714	5773	Engine EGR 2 Actuator 1 Preliminary FMI	1.1	6	100 ms
64714	5774	Engine EGR 2 Actuator 1 Temperature Status	1.6	6	100 ms
64714	5775	Engine EGR 2 Actuator 1 Temperature	2.1	6	100 ms
64714	5776	Engine EGR 2 Actuator 1 Desired Position	3.1	6	100 ms
64714	5781	Engine EGR 2 Actuator 1 Operation Status	7.1	6	100 ms

Table B-14. EGR Actuator Instance 4

EGR Actuator Instance 4

PGN	SPN	Name	Byte	Priority	Rate
64762	5265	Engine EGR 2 Actuator 2 Control Command	3.1	Rcv	Rcv
64765	5263	Engine EGR 2 Actuator 2 Position (16-bit)	3.1	4	100 ms
64714	5777	Engine EGR 2 Actuator 2 Preliminary FMI	4.1	6	100 ms
64714	5778	Engine EGR 2 Actuator 2 Temperature Status	4.6	6	100 ms
64714	5779	Engine EGR 2 Actuator 2 Temperature	5.1	6	100 ms
64714	5780	Engine EGR 2 Actuator 2 Desired Position	6.1	6	100 ms
64714	5782	Engine EGR 2 Actuator 2 Operation Status	7.5	6	100 ms

NAME Component	Instance 1	Instance 2	Instance 3	Instance 4
Function Field	147	147	147	147
Function Instance	0	1	2	3
ECU Instance	0	0	0	0
Source Address	34	34	34	34
Device SPN	NA	NA	NA	NA

Appendix C.
Determining Device Vibration Levels

Determine Vibration Levels for R-Series

When collecting vibration measurements on an engine, ensure the following is done.

1. Take measurements at each point in three orthogonal axes: X, Y, and Z.
2. Ideally, orient X along the axis of the engine's crankshaft, Y normal to the crankshaft in the horizontal plane, and Z in the vertical direction. If this orientation is not achievable, orient axes as close as possible. Document axis and accelerometer locations with pictures for future reference.
3. Take measurements as close as possible to the mounting point (i.e., the mounting bolt) on the R-Series. Ensure the location has high stiffness (i.e., not on a thin bracket a distance away from the mounting bolt). Install the accelerometer on the engine's mounting bracket/surface. The accelerometer can be located on the engine's mounting bracket/surface. Ensure the accelerometer is located on a large, stiff structure immediately next to the actuator's mounting bolt.
4. At a minimum, measure vibration at the points indicated in Figure C2-1 below and at a point on the R-Series where a high response, or vibration amplification, is expected.
5. If the R-Series is mounted to a bracket, ensure measurements are taken where the R-Series mounts to the bracket (as explained in Step 2 above) and at the base of the bracket where the bracket connects to the engine.
6. If possible, take measurements at multiple engine conditions. As a minimum, measurements should be taken at a maximum or rated engine output condition. Also, consider other output conditions that may create different vibration levels. It is recommended to take measurements at 75% and 100% load.
7. Where there is no concern for damaging parts, it is recommended that the accelerometer be screwed into a drilled and tapped hole when possible. This is normally done on the mounting bracket/surface near the R-Series mounting feet. Apply Loctite 243 or equivalent to the accelerometer's thread before installing in a tapped hole. It is recommended to use high-strength, high-temperature adhesive when attaching accelerometers to the R-Series to avoid damage to internal parts.
8. Use the following settings in the vibration measurement device.
   a. Windowing: Hanning
   b. Number of Averages: 100 or 200 lines
   c. Record Grms measurements
   d. Bandwidth: 20 Hz
   e. Frequency Span: 2 kHz
   f. High Pass Filter: 3 Hz
   g. Low Pass Filter: 5 kHz

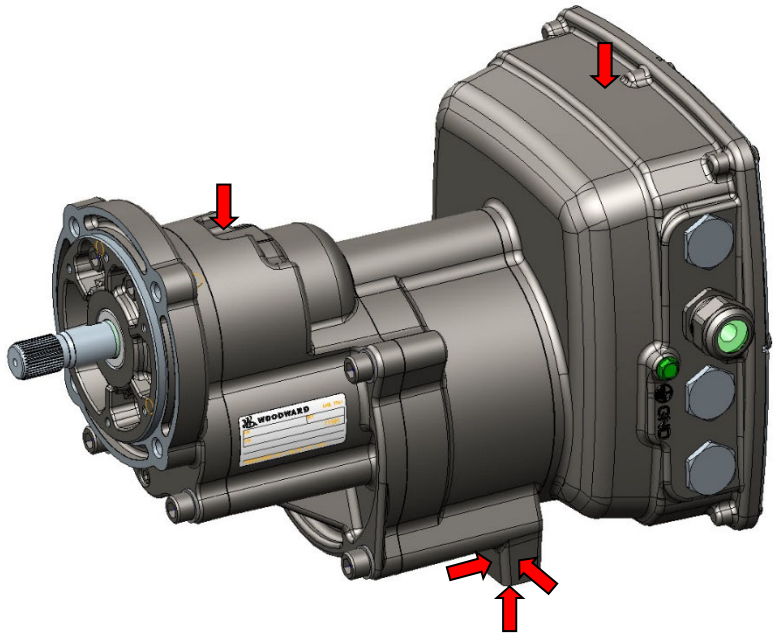

Figure C-1. R-11 and R-30 Accelerometer Locations for Determining Vibration Levels

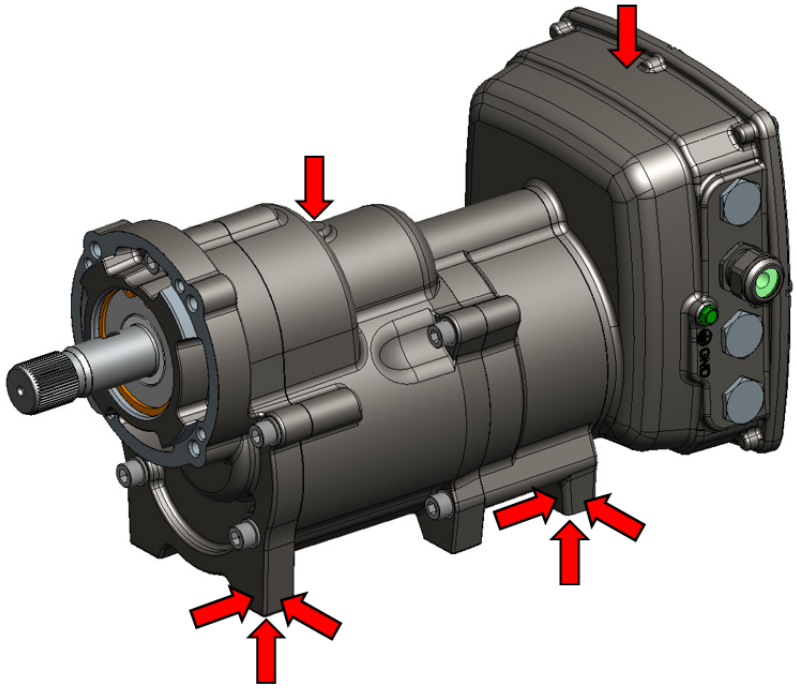

Figure C-2. R-120 Accelerometer Locations for Determining Vibration Levels

Appendix D.
R-Series Control Specifications

General

Table D-1. Work and Torque Specifications

Model	*Work Output Continuous	Torque Output Transient	Torque Output Continuous
R-11	7.2 J 5.3 ft-lb	11 N·m 8.1 lb-ft	5.5 N·m 4 lb-ft
R-30	19.6 J 14.5 ft-lb	30 N·m 22.1 lb-ft	15 N·m 11 lb-ft
R-120	94.2 J 69.5 ft-lb	120 N·m 88.4 lb-ft	60 N·m 44.2 lb-ft
R-11AC	7.2 J 5.3 ft-lb	11 N·m 8.1 lb-ft	5.5 N·m 4 lb-ft
R-30AC	19.6 J 14.5 ft-lb	30 N·m 22.1 lb-ft	15 N·m 11 lb-ft
R-120AC	94.2 J 69.5 ft-lb	120 N·m 88.4 lb-ft	60 N·m 44.2 lb-ft

Table D-2. Power and Current Specifications

Model	**Max Input Power Transient	**Max Input Power Continuous	**Max Current Transient	**Max Current Continuous
R-11	89 W	24 W	3.7 A	1.0 A
R-30	89 W	24 W	3.7 A	1.0 A
R-120	89 W	24 W	3.7 A	1.0 A
R-11AC	89 W	24 W	3.7 A	1.0 A
R-30AC	89 W	24 W	3.7 A	1.0 A
R-120AC	89 W	24 W	3.7 A	1.0 A

Table D-3. Weight

Model	Weight
R-11	8.0 kg / 17.6 lb
R-30	8.3 kg / 18.2 lb
R-120	11.9 kg / 26.3 lb
R-11AC	9.7 kg / 21.3 lb
R-30AC	9.9 kg / 21.9 lb
R-120AC	13.6 kg / 30 lb

(*) Continuous Work Output is measured over 73° of rotation for the R-11 and R-30 and over 90° rotation for the R-120. Good control of fuel racks requires the actuator to deliver a defined force over a defined distance, also known as *work*. Since *work* is the ultimate requirement, rotary actuators are best sized and compared based on continuous work rating: Continuous work (joules) = 0.01745 x continuous torque (N·m) x rotation angle (degrees) (**) at 24 VDC nominal.

Input Power

Table D-4. Input Power Specifications

Input Voltage	Continuous		Transient	
	*Max Current	*Max Power	*Max Current	*Max Power
18 VDC	1.3 A	23 W	5.2 A	94 W
24 VDC	1.0 A	24 W	3.7 A	89 W
32 VDC	0.7 A	22 W	2.7 A	86 W

(*) Maximum input power conditions occur at the maximum temperature, 105 °C

Inputs and Outputs

Table D-5. Inputs and Outputs Specifications

Power Input	18–32 VDC with out-of-range diagnostics
Command Input Type	Configurable in software, see Chapter 6. Redundant or single. Options: PWM, Analog (mA), or CAN. See details on each type below.
Output Shaft Rotation	R-11, R-30: 73° ± 2° R-120: 90° ± 2°
Position Feedback Output	4–20 mA corresponding to 0 to 100% of rotational travel, by default. See details below.
Keyswitch Input	Key-switch low power standby mode. Applying input power to the key-switch input activates the actuator making it ready to position in less than 300 ms. Removing the key-switch input power safely shuts down the actuator and its power draw is less than 2 mA. Thresholds: > 8 VDC = “ON/active”, < 5 VDC = “off/inactive”.
Discrete Output	Normally “ON” and turns “OFF” to indicate a detected fault, by default. See details below.

Performance

Table D-6. Performance Specifications

Parameter	Specification
Accuracy	±1.36% over the full rotational travel and temperature range plus command error
Maximum Slew Time (10% to 90% travel, @24VDC min)	R-11 < 75 ms R-30 < 105 ms R-120 < 600 ms
Overshoot	< 2% of full stroke
Small Signal Bandwidth	6 Hz (minimum)
Repeatability	≤1.0% of full stroke at 25 °C
Gearbox Backlash	< 0.5°
Side Load on Output Shaft	R-11, R-30: 396 N / 89 lb (maximum) R-120: 916 N / 206 lb (maximum)
Thrust Load on Output Shaft	R-11, R-30: 67 N / 15 lb (maximum) R-120: 175N / 39 lb (maximum)
Maximum Load Inertia	R-11 < 2.19E-3 kg-m² (1.94E-2 in-lb-s²) R-30 < 5.26E-3 kg-m² (4.66E-2 in-lb-s²) R-120 < 5.85E-2 kg-m^2 (0.518 in-lb-s^2)

Environmental

Table D-7. Environmental Specifications

Specification Item	Acceptable Range or Qualification Condition
Operating Temperature Limits	–40 to +105 °C (-40 to +165 °C with active water cooling option) Under all conditions, output shaft mating surface, the actuator and ambient temperature must remain below 105 °C. See Mechanical Installation section of the manual for discussion of this specification item. Some position accuracy is lost below –30 °C.
Active Cooling Temperature Limits	Units with active liquid cooling must observe the following maximum temperature constraints: T_{amb} (°C) / T_{H2O} (°C) 140 / 88.0 145 / 83.6 150 / 79.2 155 / 74.8 160 / 70.4 165 / 66.0
Storage Temperature	–40 °C to +125 °C, unpowered short-term (i.e., during transportation) 10 °C to 50 °C, unpowered long-term
Maximum Altitude	3000 meters (9843 feet)
Pollution Degree	2
Mechanical Shock	Validated to US MIL-STD-810F, Method 516.5 procedure 1 40 G peak, 11 ms duration, saw-tooth pulse
Ingress Protection	IP67 per IEC 60529, Type 4 Watertight
Humidity	95% Relative Humidity – 12 hours at 60 °C and 7 hours at 25 °C with 5 hours of transition for 5 complete cycles
Chemical Resistance	The actuator uses materials proven capable of withstanding normal engine environment chemicals per SAE J1455, such as diesel fuel, engine oil, and antifreeze.
Regulatory Compliance	See page 8
EMC	EN 61000-6-2: Immunity for Industrial Environments EN 61000-6-4: Emissions for Industrial Environments
Mechanical Vibration	Power Spectral Density (PSD) must not exceed the level or frequency as shown in Figure D-1 below while the actuator is running, as measured at the actuator's mounting surface.

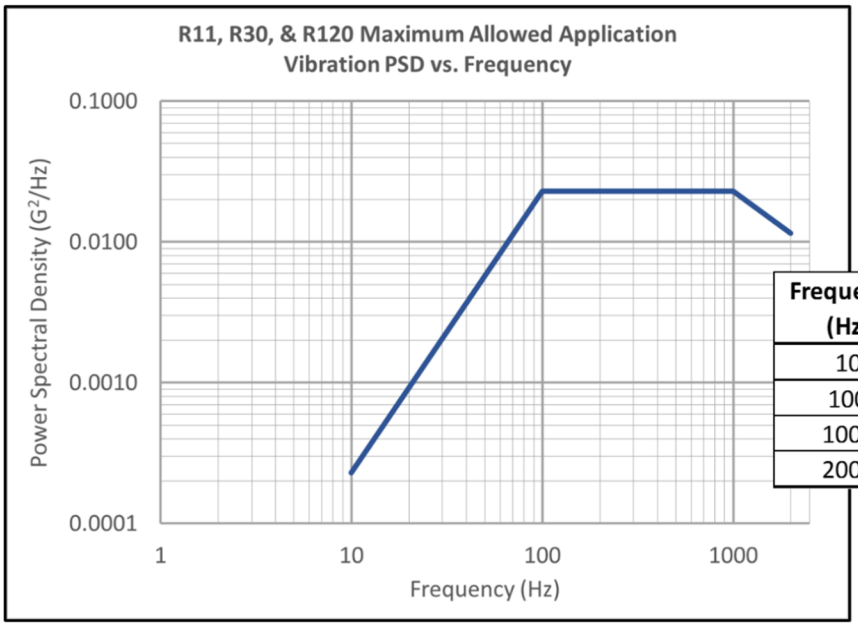

Frequency (Hz)	Allowed PSD Level (G^2/Hz)
10	0.00023
100	0.02300
1000	0.02300
2000	0.01150

Figure D-1. Power Spectral Density Maximums

Power Supply Input

Table D-8. Power Supply Input Specifications

Parameter	Value
Max Input Power	~24 W (32 VDC at 0.75 A)
Input Voltage Range	18 to 32 VDC
Max Steady State Current	1.3 A at 18 VDC
Max Transient Current	5.17 A at 18 VDC
Transient Suppression	88 to 92 VDC during surge and load dump up to 200 ms
Hold Up Time	NOTE: Depends on operating conditions. 6 ms at 24 VDC with max load
Jump Start	45 VDC max.
Out-of-Range	Configurable in software, see Chapter 7. Default settings: < 12 V(dc) for 1 sec, >35 V(dc)

PWM Command Input

Table D-9. PWM Command Input Specifications

Parameter	Value
PWM Input Type	Low-Side, High-Side, and Push-Pull (single-ended input), configured in software.
PWM Amplitude Range	8 V to 32 V p-p
Specified Frequency Range	100 Hz to 2000 Hz
Max Allowed Frequency	3000 Hz
PWM Detection Threshold	7.45 VDC nominal
PWM Hysteresis	7.2 to 7.7 VDC over the temperature range of the product. To activate the circuit, the minimum PWM amplitude must be lower than this range, and the maximum amplitude must be above.
Isolation	None
Input Impedance	2.5 kΩ to 12 VDC in low-side mode, 2 kΩ to ground in high-side mode 110 kΩ to ground in push-pull mode
Resolution	12 bits over 100 Hz to 2 kHz The duty cycle and frequency are read with reduced resolution at higher frequencies
Accuracy	±1% all modes at frequencies < 1000 Hz ±1.8% all modes at frequencies > 1000 Hz NOTE: Low-Side and High-Side detection accuracy could depend on integrity of signal source. Best accuracy is achieved by using a Push-Pull source.
I/O Execution Rate	1 ms
Loss of Signal	<80 Hz. Sets Duty Cycle and Frequency to zero.
Signal Scaling	Configurable in software, see Chapter 7. Default settings: 10% duty cycle is 0% position and 90% duty cycle is 100% position command.
Out-of-Range Duty Cycle	Configurable in software, see Chapter 7. Default settings: Duty Cycle <5% or Duty Cycle > 95%

Analog Output

Table D-10. Analog Output Specifications

Parameter	Value
Output Type	4 mA to 20 mA
Output Scaling	Configurable in software, see Chapter 7. Default settings: 4 mA is 0% position, 20 mA is 100% actuator position.
Isolation	None
Response Time Min to Max	~ 4 ms (0.5 VDC steady-state to settling at 4.5 VDC)
Position Output Update Rate	1 ms
Transient Protection	According to EMC norm
Accuracy of Position Output	±1.0% FS over entire operating temperature range
Overvoltage Protection	Output protected against 32 VDC, steady-state
Minimum Impedance	0 Ω. Output will drive into a direct short to ground without damage to the actuator.

Discrete Output

Table D-11. Discrete Output Specifications

Parameter	Value
Output Type	High-side driver
Max Voltage at Output Pin	Equal to VBatt(+)
Max Current through Switch	250 mA
Activating Persistence	Fault dependent
I/O Update Rate	10 ms
Output Selection	Configurable in software, see Chapter 7. Can indicate shutdown condition, alarm condition, or either alarm or shutdown.
Output Type	Configurable in software, see Chapter 7. High-Side or Low-Side.
Output Action	Configurable in software, see Chapter 7. Normally energized (off for fault) or de-energized (on for fault). Default setting is to remain active until a fault occurs, then switches ‘off’.
Driving Inductive Loads Protection Over-Current Protection	Yes, internally protected high-side switch. Utilizes circuitry that will open the contact when output contacts are short circuited. Self-resetting when fault is removed. Will fault at loads > 1.1 A in sourcing (high-side) mode and at loads > 400 mA in sinking (low-side) mode. (Circuits will resume normal function once fault is removed.)

Discrete Inputs

Table D-12 Discrete Inputs Specifications

Parameter	Value
Input Type	Voltage
Input Assignments	Input 1 = Run/Stop Input 2 = CAN ID Low Input 3 = CAN ID High
Input Action	Configurable in software, see Chapter 7. Individually set as active high or low. Individually set as active open or closed.
Input Voltage Range	0 VDC to VBatt(+)
Input Thresholds	> 4 VDC = “High” < 1.5 VDC = “Low”
I/O Update Rate	1 ms (Run/Stop), CAN ID inputs sampled once at power-up
Isolation	None. Use with external relay or other dry contact.
Input Current	~1 mA @ 32 VDC

Analog Input

Table D-13. Analog Input Specifications

Parameter	Value
Input Range Selection	Configured in software, see Chapter 7. 4-20 mA or 0-200 mA
Isolation	None
Transient Protection	According to EMC norm
Common Mode Voltage Range	44 V
Common Mode Rejection	65 dB
Resolution	12 bit
Current Input Accuracy	<<0.5% at 25 °C, at-factory calibrated endpoints
Current Input Drift over Temperature Range	≤ 1% FS
Linearity	1% FS over specified operating range
I/O Execution Rate	1 ms
Signal Scaling	Configurable in software, see Chapter 7. Defaults, 20 mA range: 4 mA is 0% position, 20 mA is 100% position. Defaults, 200 mA range: 20 mA is 0% position, 160 mA is 100% position.
Out-of-Range Signal	Configurable in software, see Chapter 7. 20 mA range default settings: <2 mA or >22 mA 200 mA range default settings: <10 mA or >200 mA
Over-Voltage Protection	32 VDC continuous (circuit will open during fault and close once fault is removed)
Over-Current Protection	Will fault at inputs > 24 mA in 4–20 mA range and at currents > 240 mA in 20–180 mA range. (Circuit will open during fault and close once fault is removed.)

CAN Ports

Table D-14. CAN Ports

Parameter	Value
Wiring Specification	ISO 11898, SAE J1939-11
Max Wire Length	30 m
CAN Port Isolated	No
Baud Rate:	
CAN1	Configured in software, see Chapter 7. 250 kbps, 500 kbps, and 1 Mbps
CAN2	1 Mbps ONLY
Termination Resistor	Not included in hardware. Must add 120 Ω, 0.5 W min power rating as shown in wiring diagram.

Revision History

Changes in Revision F—
- Revised Regulatory Compliance section to include UKCA updates. Removed IP67 from compliance string.
- Revised Declarations to include UKCA updates

Changes in Revision E—
- Updated for latest software version 5418-7415
- Added information on helical inserts locations in Chapter 2
- Torque information added for ground screw in Chapter 2
- Warning updated for limp mode / sudden movement at recovery in Chapter 3
- Pozidriv driver information added for electronics cover in Chapter 3
- Added Figure 8-3 and updated Figure 8-4 updated showing anti-tamper locations

Changes in Revision D—
- Removed Firmware Update section
- Added Quick Start Guide

Changes in Revision C—
- Added 2014 Compliance Directives
- Added Marine Compliance
- Added Active Cooling table of T_{amb} vs T_{H2O}
- Added Woodward 8923-2323 or AGRO Cable Gland Special Conditions for Safe Use
- Added Max Altitude and Pollution Degree 2
- Added mounting information and clarified active cooling information in Chapter 1
- Updates for shipping LRU with plugs at all gland seal locations
- Added “Transient Torque Capability” section in Chapter 4

Changes in Revision B—
- Added R-120 information. Specifically: Outline drawing, specifications, degrees of rotation, etc.
- Added available Active Water Cooling Module instructions
- Updated screen captures
- Added CANopen
- Updated outline drawings Figures 1-1 and 1-2
- Correction for keyswitch location in Figure 3-5

Changes in Revision A—
- Updated Field Wiring Diagram
- Additional information on Discreet Inputs
- Added Run/Stop Information
- Added Actuator Output Parameters Data Messages
- Added Self-Test Information
- Added information on updating firmware on R-Series actuator
- Updated messages on SAE J1939 Profiles
- Updated screen captures as necessary

Declarations

DECLARATION OF CONFORMITY

EU DoC No.:	00431-04-EU-02-01.DOCX
Manufacturer's Name:	WOODWARD, INC.
Manufacturer's Contact Address:	1041 Woodward Way Fort Collins, CO 80524 USA
Model Name(s)/Number(s):	R-Series Actuator with and without Active Cooling
The object of the declaration described above is in conformity with the following relevant Union harmonization legislation:	Directive 2014/30/EU of the European Parliament and of the Council of 26 February 2014 on the harmonization of the laws of the Member States relating to electromagnetic compatibility (EMC) Directive 2014/34/EU of the European Parliament and of the Council of 26 February 2014 on the harmonization of the laws of the Member States relating to equipment and protective systems intended for use in potentially explosive atmospheres Directive 2011/65/EU of the European Parliament and of the Council of 8 June 2011 on the restriction of the use of certain hazardous substances in electrical and electronic equipment Exemption in use: 6(c), 7(a), 7(c)-I
Markings in addition to CE mark:	Ex II 3 G, Ex nA IIC, T3 Gc
Applicable Standards:	
EMC:	EN 61000-6-4:2007/A1:2011 : Electromagnetic compatibility (EMC) - Part 6-4: Generic standards - Emission standard for industrial environments EN 61000-6-2:2005/AC:2005; Electromagnetic compatibility (EMC) - Part 6-2: Generic standards - Immunity for industrial environments
ATEX:	EN IEC 60079-0:2018 - Explosive atmospheres - Part 0: Equipment - General requirements EN 60079-15 :2010: Explosive atmospheres - Part 15: Equipment protection by type of protection "n"

This declaration of conformity is issued under the sole responsibility of the manufacturer
We, the undersigned, hereby declare that the equipment specified above conforms to the above Directive(s).

MANUFACTURER

Signature	Annette Lynch
Full Name	Annette Lynch
Position	Engineering Manager
Place	Woodward, Fort Collins, CO, USA
Date	**16-May-2023**

5-09-1183 Rev 37

DECLARATION OF INCORPORATION
Of Partly Completed Machinery
2006/42/EC

File name:	00431-04-EU-02-02
Manufacturer's Name:	WOODWARD INC.
Manufacturer's Address:	1041 Woodward Way, Fort Collins, CO 80524 USA
Model Names:	R-Series with and without Active Cooling
This product complies, where applicable, with the following Essential Requirements of Annex I:	1.1, 1.2, 1.3, 1.4, 1.5, 1.6, 1.7

The relevant technical documentation is compiled in accordance with part B of Annex VII. Woodward shall transmit relevant information if required by a reasoned request by the national authorities. The method of transmittal shall be agreed upon by the applicable parties.

The person authorized to compile the technical documentation:

Name: Dominik Kania, Managing Director
Address: Woodward Poland Sp. z o.o., ul. Skarbowa 32, 32-005 Niepolomice, Poland

This product must not be put into service until the final machinery into which it is to be incorporated has been declared in conformity with the provisions of this Directive, where appropriate.

The undersigned hereby declares, on behalf of Woodward Inc. of Loveland and Fort Collins, Colorado that the above referenced product is in conformity with Directive 2006/42/EC as partly completed machinery:

MANUFACTURER

Signature	Annette Lynch
Full Name	Annette Lynch
Position	Engineering Manager
Place	Woodward Inc., Fort Collins, CO, USA
Date	3/30/2022

Document : 5-09-1182 (rev. 21) **PAGE** 1 of 1

UKCA DECLARATION OF CONFORMITY

UKCA DoC No.: 00431-EU-UKCA-02-01
Manufacturer's Name: WOODWARD INC.

Manufacturer's Contact Address: 1041 Woodward Way
Fort Collins, CO 80524 USA

Model Name(s)/Number(s): R-Series with and without Active Cooling

Markings in addition to UKCA marking: Ex II 3 G, Ex nA IIC, T3 Gc

---

The object of this Declaration is in full conformity with the following UK Statutory Instruments (and their amendments):

S.I. 2016 No. 1107	Equipment and Protective Systems Intended for use in Potentially Explosive Atmospheres Regulations 2016
S.I. 2016 No. 1091	Electromagnetic Compatibility Regulations 2016
S.I. 2020 No. 1647	The Hazardous Substances and Packaging (Legislative Functions and Amendments) (EU Exit) Regulations 2020 Exemption in use: 6(c), 7(a), 7(c)-I

The Object of this Declaration is in conformity with the applicable requirements of the following designated standards and technical specifications.

EN 61000-6-4:2007, EN 61000-6-4:2007/A1:2011	Electromagnetic compatibility (EMC) - Part 6-4: Generic standards - Emission standard for industrial environments
EN 61000-6-2:2005, EN 61000-6-2:2005/AC:2005	Electromagnetic compatibility (EMC) - Part 6-2: Generic standards - Immunity for industrial environments
EN IEC 60079-0:2018	Explosive atmospheres - Part 0: Equipment - General requirements
EN 60079-15:2010	Explosive atmospheres - Part 15: Equipment protection by type of protection "n"

This declaration of conformity is issued under the sole responsibility of the manufacturer
We, the undersigned, hereby declare that the equipment specified above conforms to the above Regulation(s).

MANUFACTURER

Annette Lynch
Signature

Annette Lynch
Full Name

Engineering Manager
Position

Woodward, Fort Collins, CO, USA
Place

16-May-2023
Date

Page 1 of 1

5-09-1183 Rev 37

DECLARATION OF INCORPORATION
Of Partly Completed Machinery
S.I. 2008 No. 1597

File name:	00431-EU-UKCA-02-02
Manufacturer's Name:	WOODWARD INC.
Manufacturer's Address:	1041 Woodward Way Fort Collins, CO 80524 USA
Model Names:	R-Series with and without Active Cooling
This product complies, where applicable, with the following Essential Requirements of Annex I:	1.1, 1.2, 1.3,1.5, 1.6, 1.7

The relevant technical documentation is compiled in accordance with part B of Annex VII. Woodward shall transmit relevant information if required by a reasoned request by the national authorities. The method of transmittal shall be agreed upon by the applicable parties.

The person authorized to compile the technical documentation:

Name: Andy Marshall, General Manager at Woodward Prestwick
Address: 5 Shawfarm Road, Prestwick, Ayrshire, Scotland, United Kingdom KA9 2TR

This product must not be put into service until the final machinery into which it is to be incorporated has been declared in conformity with the provisions of this Directive, where appropriate.

The undersigned hereby declares, on behalf of Woodward Inc. of Loveland and Fort Collins, Colorado that the above referenced product is in conformity with Regulation S.I. 2008 No. 1597 as partly completed machinery:

MANUFACTURER

Signature	Annette Lynch
Full Name	Annette Lynch
Position	Engineering Manager
Place	Woodward Inc., Fort Collins, CO, USA
Date	3/30/2022

Document: 5-09-1182 (rev. 21) **PAGE** 1 of 1

We appreciate your comments about the content of our publications.

Send comments to: industrial.support@woodward.com

Please reference publication 26845.

B 2 6 8 4 5 : F

PO Box 1519, Fort Collins CO 80522-1519, USA
1041 Woodward Way, Fort Collins CO 80524, USA
Phone +1 (970) 482-5811

Email and Website—www.woodward.com

Woodward has company-owned plants, subsidiaries, and branches, as well as authorized distributors and other authorized service and sales facilities throughout the world.

Complete address / phone / fax / email information for all locations is available on our website.