Released

WOODWARD

Product Manual 35219V1
(Revision B, 3/2026)
Original Instructions



MicroNet XT™ Control
Volume 1

Manual 35219 consists of four volumes:
(35219V1, 35219V2, 35219V3, & 35219V4)

Installation and Operation Manual

Released

General Precautions

Read this entire manual and all other publications pertaining to the work to be performed before installing, operating, or servicing this equipment.

Practice all plant and safety instructions and precautions.

Failure to follow instructions can cause personal injury and/or property damage.

Revisions

This publication may have been revised or updated since this copy was produced. The latest version of most publications is available on the Woodward website.

Woodward Industrial Support: Get Help

If your publication is not there, please contact your customer service representative to get the latest copy.

Proper Use

Any unauthorized modifications to or use of this equipment outside its specified mechanical, electrical, or other operating limits may cause personal injury and/or property damage, including damage to the equipment. Any such unauthorized modifications: (i) constitute "misuse" and/or "negligence" within the meaning of the product warranty thereby excluding warranty coverage for any resulting damage, and (ii) invalidate product certifications or listings.

Translated Publications

If the cover of this publication states "Translation of the Original Instructions" please note:

The original source of this publication may have been updated since this translation was made. The latest version of most publications is available on the Woodward website.

Woodward Industrial Support: Get Help

Always compare with the original for technical specifications and for proper and safe installation and operation procedures.

If your publication is not on the Woodward website, please contact your customer service representative to get the latest copy.

Revisions— A bold, black line alongside the text identifies changes in this publication since the last revision.

Woodward reserves the right to update any portion of this publication at any time. Information provided by Woodward is believed to be correct and reliable. However, no responsibility is assumed by Woodward unless otherwise expressly undertaken.

Manual 35219V1
Copyright © Woodward, Inc. 2024-2026
All Rights Reserved

Released

Contents

This manual consists of four volumes:

- Volume 1 contains hardware and operation information
- Volume 2 is reserved for future use
- Volume 3 contains information about the MicroNet XT software
- Volume 4 contains cyber security information

CHAPTER 1. GENERAL INFORMATION 14
1.1. Introduction 14
1.2. Specifications and Compatibility 14

CHAPTER 2. MICRONET XT CONTROL SYSTEMS 15
2.1. MicroNet XT Configurations 15
2.2. MicroNet XT Simplex CPU Systems 15
2.2.1. Simplex System Configuration 15
2.2.2. MicroNet XT Simplex System Networking 16
2.2.3. Redundant Power Supplies 18
2.2.4. Simplex CPU 18
2.2.5. Simplex Inputs and Outputs 18
2.2.6. Redundant Inputs 18
2.2.7. Redundant Outputs 19
2.2.8. I/O Module Wiring Options 19
2.2.9. MicroNet XT Simplex Operation 20
2.3. MicroNet XT Redundant CPU Systems 20
2.3.1. Redundant CPU Theory 20
2.3.2. Redundant System Diagrams 21
2.3.3. MicroNet XT Redundant System Networking 21
2.3.4. Redundant Power Supplies 23
2.3.5. Redundant CPUs 23
2.3.6. Simplex Inputs and Outputs 23
2.3.7. Redundant Inputs 23
2.3.8. Redundant Outputs 24
2.3.9. I/O Module Wiring Options 24
2.3.10. MicroNet XT Redundant Operation 25

CHAPTER 3. CHASSIS CONFIGURATIONS 27
3.1. MicroNet XT 14-Slot Chassis 27
3.1.1. Specifications 27
3.1.2. Chassis Outline Drawing 28
3.1.3. Troubleshooting 31

CHAPTER 4. POWER SUPPLIES 32
4.1. MicroNet XT Control Power Supply Low Voltage 24 VDC 32
4.1.1. Specifications 33
4.1.2. Installation 35
4.1.3. Input Power Wiring 36
4.1.4. Troubleshooting 39

CHAPTER 5. MICRONET XT CPUS 41
5.1. Control CPU Module 41
5.1.1. Specifications 42
5.1.2. Front Panel Indicators 43
5.1.3. Front Panel Ports 44
5.1.4. Installation 46
5.1.5. Communications (Ethernet) 46
5.1.6. Troubleshooting 50

CHAPTER 6. COMMUNICATION MODULES 52

Released

6.1. Remote RTN Module 52
6.1.1. Specifications 53
6.1.2. Front Panel Indicators 54
6.1.3. Front Panel Reset Switch 54
6.1.4. RTN Ports 55
6.1.5. RTN Configuration 55
6.1.6. Installation 57
6.1.7. Troubleshooting 57
6.1.8. Ethernet Switch Hardware 58
6.1.9. Expansion Racks Using Copper or Fiber Cables 59

CHAPTER 7. DISCRETE I/O MODULES 60
7.1. MicroNet XT Discrete I/O 32/16 60
7.1.1. Discrete Input Specifications 61
7.1.2. Discrete Output Specifications 61
7.1.3. Installation 62
7.1.4. Module Wiring 63
7.1.5. Direct Cabinet Ground Connection 71
7.1.6. Instrument Earth (IE) Ground Connection 71
7.1.7. Field Wiring 72
7.1.8. Relay Box Module—8 Channel 73
7.1.9. Troubleshooting 76

CHAPTER 8. ANALOG I/O MODULES 80
8.1. Flex AIO Module 80
8.1.1. Speed Sensor Input Specifications 81
8.1.2. - 20 mA/0 – 5 V Input Specifications 82
8.1.3. RTD Specifications 82
8.1.4. Thermocouple Specifications 83
8.1.5. 4 – 20 mA/0 – 200 mA Proportional Actuator Output Specifications 84
8.1.6. Installation 85
8.1.7. Module Wiring 87
8.1.8. JMP1: Ground Selection 95
8.1.9. JMP2: Direct or Capacitive Coupling 95
8.1.10. Field Wiring 96
8.1.11. Troubleshooting 98
8.2. AIO 16/8 Module 103
8.2.1. Analog Inputs Specifications (4-20 mA, 0-5Vdc) 103
8.2.2. Analog Output Specifications (4-20 mA) 104
8.2.3. Installation 105
8.2.4. Module Wiring 106
8.2.5. JMP1: Ground Selection 112
8.2.6. JMP2: Direct or Capacitive Coupling 112
8.2.7. Field Wiring 113
8.2.8. Troubleshooting 114
8.3. RTD/TC 12 Module 118
8.3.1. RTD Specifications 119
8.3.2. Thermocouple Specifications 119
8.3.3. Installation 122
8.3.4. Module Wiring 124
8.3.5. JMP1: Ground Selection 130
8.3.6. JMP2: Direct or Capacitive Coupling 130
8.3.7. Field Wiring 131
8.3.8. Troubleshooting 131

CHAPTER 9. ACTUATOR MODULES 135
9.1. Integrating Actuator Controller Module 135
9.1.1. Module Description 135
9.1.2. Specifications 136
9.1.3. Installation 138

Released

9.1.4. Module Wiring 139
9.1.5. JMP1: Ground Selection 145
9.1.6. JMP2: Direct or Capacitive Coupling 145
9.1.7. Field Wiring 146
9.1.8. Troubleshooting 148

CHAPTER 10. INSTALLATION AND REPLACEMENT PROCEDURES 152
10.1. Pre-Installation Information 152
10.1.1. Storage 152
10.1.2. Unpacking 152
10.1.3. Unit Location 152
10.2. Installation Procedures 152
10.2.1. Installing a CPU or I/O Module into an Unpowered Chassis 153
10.2.2. Installing a MicroNet XT Power Supply Module 154
10.2.3. Installing FTMs 154
10.3. Application Information for Standard (Non-EMC) Cabinets 156
10.3.1. Cable Shields and Cable Shield Termination 156
10.3.2. Wiring Notes 157
10.3.3. Grounding and Grounding Concerns 160
10.3.4. Cable Entry and Exit (Transition) Locations 161
10.3.5. Equipment Zoning (Segregation) 162
10.3.6. Input Power Routing and Filtering 163
10.3.7. Analog I/O Routing and Shield Termination 163
10.3.8. Shielded Discrete I/O Routing and Shield Termination 163
10.3.9. Unshielded I/O 164
10.3.10. Ethernet I/O Connections 164
10.3.11. Connection of Cabinet to Installation Ground 164
10.3.12. Equipment Bonding 164
10.3.13. Safety Ground Wire Installation 165
10.3.14. Installation of Other Equipment, Fans, Meters, etc. 165
10.4. Application Information for EMC Cabinet/Enclosure 165
10.4.1. EMC Cabinet Indication 165
10.4.2. Shields and Grounding 166
10.4.3. MicroNet XT Module Cable Shield Grounding 166
10.4.4. Cabinet Structural Grounding 166
10.4.5. Cable Entry or Exit (Transition) Locations 166
10.4.6. Equipment Zoning (Segregation) 166
10.4.7. Input Power Routing and Filtering 166
10.5. Replacement Procedures 167
10.5.1. Safety Considerations 167
10.5.2. Replacing a MicroNet XT Module 167

CHAPTER 11. PRODUCT SUPPORT AND SERVICE OPTIONS 169
11.1. Product Support Options 169
11.2. Product Service Options 169
11.3. Returning Equipment for Repair 170
11.4. Replacement Parts 171
11.5. Engineering Services 171
11.6. Contacting Woodward's Support Organization 171
11.7. Technical Assistance 172

REVISION HISTORY 181

DECLARATIONS 182

Released

Illustrations and Tables

Figure 2-1. MicroNet XT Control with Simplex CPU 16
Figure 2-2. Simplex Expansion Chassis Network – Point-to-Point 17
Figure 2-3. Simplex Expansion Chassis Network – With Switches 17
Figure 2-4. Input Flow 18
Figure 2-5. Output Flow 18
Figure 2-6. Redundant Sensors 19
Figure 2-7. Redundant Inputs 19
Figure 2-8. I/O Module Wiring Options for Simplex Systems 20
Figure 2-9. MicroNet XT Control with Redundant CPUs 21
Figure 2-10. Redundant Expansion Chassis Network – Point-to-Point 22
Figure 2-11. Redundant Expansion Chassis Network – With Switches 22
Figure 2-12. Input Flow 23
Figure 2-13. Output Flow 23
Figure 2-14. Redundant Sensors 24
Figure 2-15. Redundant Inputs 24
Figure 2-16. I/O Module Wiring Options for Redundant Systems 25
Figure 3-1. MicroNet XT 14-Slot Chassis 27
Figure 3-2. MicroNet XT 14-Slot Chassis Outline Drawing 28
Figure 3-3. MicroNet XT 14-Slot Chassis Mounting Footprint Dimensions 29
Figure 3-4. MicroNet XT 14-Slot Chassis Ground Locations 30
Figure 4-1. MicroNet XT LVPS Module 33
Figure 4-2. MicroNet XT LVPS Module Block Diagram 34
Figure 4-3. MicroNet XT LVPS Module Installation 35
Figure 4-4. MicroNet XT LVPS Module Input Power Connection Diagram 36
Figure 5-1. MicroNet XT Control CPU 41
Figure 5-2. MicroNet XT Control CPU Module Block Diagram 42
Figure 5-3. MicroNet XT Control CPU Reset Buttons 44
Figure 5-4. MicroNet XT Control CPU Service Port Interface 45
Figure 5-5. MicroNet XT Control CPU Module Service Port Connector 45
Figure 5-6. MicroNet XT Control CPU Module Service Port Block Diagram 46
Figure 5-7. Simple Teamed NIC Setup 47
Figure 5-8. Simple Un-teamed NIC Setup 48
Figure 5-9. Teamed Network with No Direct Connection to MicroNet XT Control CPU 49
Figure 5-10. Factory Reset Button 51
Figure 6-1. Remote RTN Module 52
Figure 6-2. Remote RTN Module Block Diagram 53
Figure 6-3. Remote RTN Module Hardware Configuration 55
Figure 6-4. MicroNet XT Remote RTN Service Port Interface 56
Figure 6-5. MicroNet XT Remote RTN Module, Service Port Connector 56
Figure 6-6. MicroNet XT Remote RTN Module, Service Port Block Diagram 56
Figure 6-7. MicroNet XT Redundant System 59
Figure 7-1. MicroNet XT DIO 32/16 Module 61
Figure 7-2. DIO Module Block Diagram 62
Figure 7-3. DIO 32/16 Module Connector 64
Figure 7-4. Special Nylon Wiring Tool 65
Figure 7-5. Connector Tool Operation 65
Figure 7-6. Removing Connector Plug Keying Tab 66
Figure 7-7. Inserting the Keying Element into the Module Connector 66
Figure 7-8. DIO 32/16 Module Connector Pinout 66
Figure 7-9. Discrete FTM with Screw Type Terminals 67
Figure 7-10. Discrete FTM with Spring Type Terminals 68
Figure 7-11. Grey Discrete FTM Cable 69
Figure 7-12. FTM Wiring for Discrete Inputs/Outputs 70
Figure 7-13. FTM Wiring for Discrete Inputs 70
Figure 7-14. FTM Wiring for External Power Supplies 71
Figure 7-15. FTM Shield Grounding for Customer Supplied Instrument Earth 71

Released

Figure 7-16. DIO 32/16 Module Relay Module Wiring 72
Figure 7-17. DIO 32/16 Module Discrete Input Interface Wiring Using Internal Power Supply 72
Figure 7-18. DIO 32/16 Module Discrete Input Interface Wiring Using an External Power Supply 73
Figure 7-19. DIO 32/16 Module Relay Output Interface Wiring Using Module Power Supply 73
Figure 7-20. DIO 32/16 Module Relay Output Interface Wiring Using External Power Supply 73
Figure 7-21. 8 Channel Relay Modules, 10 A and 6 A, Shown Wired to Module Connector 74
Figure 7-22. Single Relay Wiring Connections 74
Figure 8-1. Flex AIO Module 81
Figure 8-2. Flex AIO Module Block Diagram 84
Figure 8-3. Flex AIO Module Connector 88
Figure 8-4. Special Nylon Wiring Tool 88
Figure 8-5. Connector Tool Operation 89
Figure 8-6. Removing Connector Plug Keying Tab 89
Figure 8-7. Inserting the Keying Element into the Module Connector 90
Figure 8-8. Flex AIO Module Connector Pinouts 90
Figure 8-9. Analog FTM with Screw Type Terminals 91
Figure 8-10. Analog FTM with Spring Type Terminals 91
Figure 8-11. Black Analog FTM Cable 92
Figure 8-12. FTM Wiring for the Flex AIO Analog Outputs and Speed Inputs (J1) 94
Figure 8-13. FTM Wiring for the Flex AIO Analog Inputs (J2) 95
Figure 8-14. FTM Shield Grounding Configuration Jumpers 96
Figure 8-15. Flex AIO Module MPU and Prox Probe Interface Wiring 96
Figure 8-16. Flex AIO Module Self and Loop Powered Analog Input Wiring 97
Figure 8-17. Flex AIO Module Voltage Input Wiring 97
Figure 8-18. 2 and 3 Wire Flex AIO Module RTD Input Wiring 97
Figure 8-19. Flex AIO Module Thermocouple Input Wiring 97
Figure 8-20. Flex AIO Module Proportional Actuator Output Wiring 98
Figure 8-21. AIO 16/8 Module 103
Figure 8-22. AIO 16/8 Module Block Diagram 105
Figure 8-23. AIO 16/8 Module Connector 106
Figure 8-24. Special Nylon Wiring Tool 107
Figure 8-25. Connector Tool Operation 107
Figure 8-26. Removing Connector Plug Keying Tab 108
Figure 8-27. Inserting the Keying Element into the Module Connector 108
Figure 8-28. AIO 16/8 Module Connector Pinouts 109
Figure 8-29. Analog FTM with Screw Type Terminals 110
Figure 8-30. Analog FTM with Spring Type Terminals 110
Figure 8-31. Black Analog FTM Cable 111
Figure 8-32. FTM Wiring for the AIO 16/8 Module 112
Figure 8-33. FTM Shield Grounding Configuration Jumpers 113
Figure 8-34. Analog Input – Self-Powered Block Diagram 113
Figure 8-35. Analog Input – Loop-Powered Block Diagram 113
Figure 8-36. A16/8 Voltage Input Wiring Diagram 113
Figure 8-37. Analog Output Block Diagram 114
Figure 8-38. RTD/TC 12 Module 118
Figure 8-39. RTD/TC 12 Module Block Diagram 121
Figure 8-40. RTD/TC 12 Module Connector 124
Figure 8-41. Special Nylon Wiring Tool 125
Figure 8-42. Connector Tool Operation 125
Figure 8-43. Removing Connector Plug Keying Tab 126
Figure 8-44. Inserting the Keying Element into the Module Connector 126
Figure 8-45. RTD/TC 12 Module Connector Pinouts 127
Figure 8-46. Analog FTM with Screw Type Terminals 128
Figure 8-47. Analog FTM with Spring Type Terminals 128
Figure 8-48. Black Analog FTM Cable 129
Figure 8-49. FTM Wiring for the RTD/TC 12 Module 130
Figure 8-50. FTM Shield Grounding Configuration Jumpers 131
Figure 8-51. 2 and 3 Wire RTD/TC Module RTD Input Wiring 131
Figure 8-52. RTD/TC 12 Module Thermocouple Input Wiring 131

Released

Figure 9-1. Integrating Actuator Controller Module 136
Figure 9-2. Integrating Actuator Controller Module Block Diagram 138
Figure 9-3. Integrating Actuator Controller Module Connector 139
Figure 9-4. Special Nylon Wiring Tool 140
Figure 9-5. Connector Tool Operation 140
Figure 9-6. Removing Connector Plug Keying Tab 141
Figure 9-7. Inserting the Keying Element into the Module Connector 141
Figure 9-8. Integrating Actuator Controller Module Connector Pinout 141
Figure 9-9. Analog FTM with Screw Type Terminals 142
Figure 9-10. Analog FTM with Spring Type Terminals 143
Figure 9-11. Black Analog FTM Cable 144
Figure 9-12. FTM Wiring for the Integrating Actuator Controller Module 145
Figure 9-13. FTM Shield Grounding Configuration Jumpers 146
Figure 9-14. Integrating Actuator Controller Module Actuator Driver Wiring Example 146
Figure 9-15. Integrating Actuator Controller Module LVDT/RVDT Wiring Example 147
Figure 9-16. Integrating Actuator Controller Module DCDT Wiring Example 148
Figure 10-1. MicroNet XT Power Supply 154
Figure 10-2. Simplex Discrete FTM Dimensions 155
Figure 10-3. Simplex Analog FTM Dimensions 155
Figure 10-4. Cable Shield Termination Diagram 159
Figure 10-5. Zoning Example 162

Table 2-1. MicroNet XT Configurations 15
Table 3-1. MicroNet XT Chassis Part Numbers 27
Table 4-1. MicroNet XT Power Supply Part Numbers 32
Table 4-2. MicroNet XT Power Supply Connector Kits (Optional) 32
Table 4-3. MicroNet XT LVPS Module Specification (24 VDC Input) 34
Table 4-4. MicroNet XT LVPS Module Specification (24 VDC Input) 36
Table 4-5. MicroNet XT LVPS Wiring Requirements 37
Table 4-6. Voltage Drop Using American Wire Gauge (AWG) 38
Table 4-7. Voltage Drop Using Wire Area (mm2) 39
Table 5-1. MicroNet XT Control CPU Module Part Numbers 41
Table 5-2. CPU Module General Specifications 42
Table 5-3. MicroNet XT Control CPU Module Front Panel LEDs 43
Table 5-4. MicroNet XT Control CPU Module Ethernet Connector (RJ45) Ports #1-4 (10/100/1000) 47
Table 5-5. MicroNet XT Control CPU Module CPU OK and COMMS LED Flash Codes 50
Table 6-1. MicroNet XT Remote RTN Module Part Numbers 52
Table 6-2. RTN Module General Specifications 53
Table 6-3. MicroNet XT Remote RTN Module Front Panel LEDs 54
Table 6-4. MicroNet XT - Remote RTN Module LED Flash Codes 58
Table 7-1. MicroNet XT Discrete I/O Module Part Numbers 60
Table 7-2. Relay Box Kit Part Numbers (Optional) 60
Table 7-3. MicroNet XT I/O Module Connector Kits (Optional) 60
Table 7-4. Discrete Input Specifications 61
Table 7-5. Discrete Output Specifications 61
Table 7-6. I/O Module Connector Wire Gauges 65
Table 7-7. MicroNet XT Discrete I/O FTM Part Numbers 67
Table 7-8. MicroNet XT Discrete I/O FTM Cable Part Numbers 68
Table 7-9. FTM Wire Gauges 69
Table 7-10. 10 A Relay Specifications 74
Table 7-11. 6 A Relay Specifications 75
Table 7-12. DIO LED Indications of Failure 77
Table 8-1. MicroNet XT Analog I/O Module Part Numbers 80
Table 8-2. MicroNet XT I/O Module Connector Kits (Optional) 80
Table 8-3. Flex AIO Module Speed Sensor Specifications 81
Table 8-4. Flex AIO Module 4 – 20 mA/0-5 V Specifications 82
Table 8-5. Flex AIO Module RTD Input Specifications 82
Table 8-6. Flex AIO Module RTD Curve Limits 83
Table 8-7. Flex AIO Module RTD Curve Types 83

Released

Table 8-8. Flex AIO Module Thermocouple Input Specifications 83
Table 8-9. Flex AIO Module Thermocouple Range Limits 83
Table 8-10. Flex AIO Module Proportional Actuator 4 – 20 mA/0 – 200 mA Output Ratings 84
Table 8-11. Flex AIO Module Connector Wire Gauges 88
Table 8-12. MicroNet XT Analog I/O FTM Part Numbers 91
Table 8-13. MicroNet XT Analog I/O FTM Cable Part Numbers 92
Table 8-14. FTM Wire Guages 94
Table 8-15. Flex AIO LED Indications of Failure 99
Table 8-16. AIO 16/8 Analog Input Specifications 103
Table 8-17. AIO 16/8 Analog Output Specifications 104
Table 8-18. AIO 16/8 Module Connector Wire Gauges 107
Table 8-19. MicroNet XT Analog I/O FTM Part Numbers 109
Table 8-20. MicroNet XT Analog I/O FTM Cable Part Numbers 110
Table 8-21. FTM Wire Gauges 111
Table 8-22. AIO 16/8 LED Indications of Failure 115
Table 8-23. RTD/TC 12 Module RTD Input Specifications 119
Table 8-24. RTD/TC 12 Module RTD Curve Limits 119
Table 8-25. RTD/TC 12 Module RTD Curve Types 119
Table 8-26. RTD/TC 12 Module Thermocouple Input Specifications 119
Table 8-27. RTD/TC 12 Module Thermocouple Range Limits 121
Table 8-28. RTD/TC 12 Module Connector Wire Gauges 124
Table 8-29. MicroNet XT Analog I/O FTM Part Numbers 128
Table 8-30. MicroNet XT Analog I/O FTM Cable Part Numbers 129
Table 8-31. FTM Wire Gauges 129
Table 8-32. RTD/TC 12 LED Indications of Failure 132
Table 9-1. MicroNet XT Actuator Controller Module Part Numbers 135
Table 9-2 MicroNet XT I/O Module Connector Kits (Optional) 135
Table 9-3. Integrating Actuator Controller Module Specifications 136
Table 9-4. Integrating Actuator Controller Module Connector Wire Gauges 139
Table 9-5. MicroNet XT Analog I/O FTM Part Numbers 142
Table 9-6. MicroNet XT Analog I/O FTM Cable Part Numbers 144
Table 9-7. FTM Wire Gauges 144
Table 9-8. Integrating Actuator Controller Module LED Indications of Failure 149

Appendix Table B-1. Coder Compatibility with CPU Modules 176
Appendix Table B-2. Coder Compatibility with Different Control Platforms 177
Appendix Table B-3. Module Compatibility Matrix 177

The following are trademarks of Woodward, Inc.:

GAP
LINKnet
LINKnet HT
MicroNet XT
RTCnet

The following are trademarks of their respective companies:

Modbus (Schneider Automation Inc.)

Released

Warnings and Notices

Important Definitions

This is the safety alert symbol used to alert you to potential personal injury hazards. Obey all safety messages that follow this symbol to avoid possible injury or death.

- **DANGER** - Indicates a hazardous situation, which if not avoided, will result in death or serious injury.
- **WARNING** - Indicates a hazardous situation, which if not avoided, could result in death or serious injury.
- **CAUTION** - Indicates a hazardous situation, which if not avoided, could result in minor or moderate injury.
- **NOTICE** - Indicates a hazard that could result in property damage only (including damage to the control).
- **IMPORTANT** - Designates an operating tip or maintenance suggestion.

WARNING

Lockout/Tagout
LOTO

Ensure that personnel are fully trained on LOTO procedures prior to attempting to replace or service equipment on a "live" running Prime Mover. All safety protective systems (overspeed, over temperature, overpressure, etc.) must be in proper operational condition prior to the start or operation of a running engine. Personnel should be equipped with appropriate personal protective equipment to minimize the potential for injury due to release of hot hydraulic fluids, exposure to hot surfaces and/or moving parts, or any moving parts that may be activated and are located in the area of control of the unit.

WARNING

IOLOCK. When a CPU or I/O module fails, watchdog logic drives it into an IOLOCK condition where all output circuits and signals are driven to a known de-energized state as described below. The System MUST be designed such that IOLOCK and power OFF states will result in a SAFE condition of the controlled device.

- **CPU and I/O module failures will drive the module into an IOLOCK state.**
- **CPU failure will assert an IOLOCK signal to all modules and expansion racks to drive them into an IOLOCK state.**
- **Discrete outputs / relay drivers will be non-active and de-energized.**
- **Analog and actuator outputs will be non-active and de-energized with zero voltage or zero current.**

The IOLOCK state is asserted under various conditions including:

- **CPU and I/O module watchdog failures**
- **PowerUp and PowerDown conditions**
- **System reset and hardware/software initialization**
- **Entering configuration mode**
- **User selection**

NOTE: Additional watchdog details and any exceptions to these failure states are specified in the related CPU or I/O module section of the manual.

Released

⚠WARNING

Overspeed / Overtemperature / Overpressure

The engine, turbine, or other type of prime mover should be equipped with an overspeed shutdown device to protect against runaway or damage to the prime mover with possible personal injury, loss of life, or property damage.

The overspeed shutdown device must be totally independent of the prime mover control system. An overtemperature or overpressure shutdown device may also be needed for safety, as appropriate.

⚠WARNING

Personal Protective Equipment

The products described in this publication may present risks that could lead to personal injury, loss of life, or property damage. Always wear the appropriate personal protective equipment (PPE) for the job at hand. Equipment that should be considered includes but is not limited to:

- **Eye Protection**
- **Hearing Protection**
- **Hard Hat**
- **Gloves**
- **Safety Boots**
- **Respirator**

Always read the proper Material Safety Data Sheet (MSDS) for any working fluid(s) and comply with recommended safety equipment.

⚠WARNING

Start-up

Be prepared to make an emergency shutdown when starting the engine, turbine, or other type of prime mover, to protect against runaway or overspeed with possible personal injury, loss of life, or property damage.

NOTICE

Battery Charging Device

To prevent damage to electrical devices attached to a power bus that consists of batteries and an alternator or a similar high current battery-charging device, make sure the charging device current is turned off before disconnecting the battery from the system.

Released

Electrostatic Discharge Awareness

NOTICE

Electrostatic Precautions

Electronic controls contain static-sensitive parts. Observe the following precautions to prevent damage to these parts:

- **Discharge body static before handling the control (with power to the control turned off, contact a grounded surface and maintain contact while handling the control).**
- **Avoid all plastic, vinyl, and Styrofoam (except antistatic versions) around printed circuit boards.**
- **Do not touch the components or conductors on a printed circuit board with your hands or with conductive devices.**

To prevent damage to electronic components caused by improper handling, read and observe the precautions in Woodward manual *82715*, *Guide for Handling and Protection of Electronic Controls, Printed Circuit Boards, and Modules*.

Follow these precautions when working with or near the control.

1. Avoid the build-up of static electricity on your body by not wearing clothing made of synthetic materials. Wear cotton or cotton-blend materials as much as possible because these do not store static electric charges as much as synthetic materials.
2. Do not remove the printed circuit board (PCB) from the control cabinet unless absolutely necessary. If you must remove the PCB from the control cabinet, follow these precautions:
   - Do not touch any part of the PCB except the edges.
   - Do not touch the electrical conductors, the connectors, or the components with conductive devices or with your hands.
   - When replacing a PCB, keep the new PCB in the antistatic protective bag it comes in until you are ready to install it. Immediately after removing the old PCB from the control cabinet, place it in the antistatic protective bag.

Released

Regulatory Compliance

European Compliance for CE Marking
These listings are limited only to those units bearing the CE Marking:

EMC Directive: Declared to Directive 2014/30/EU of the European Parliament and of the Council of 26 February 2014 on the harmonization of the laws of the Member States relating to electromagnetic compatibility (EMC) and applicable amendments.

Low Voltage Directive: Directive 2014/35/EU on the harmonization of the laws of the Member States relating to making electrical equipment available on the market that is designed for use within certain voltage limits.

ATEX Directive:
These listings are limited only to those units bearing the Ex marking.

Directive 2014/34/EU on the harmonization of the laws of the Member States relating to equipment and protective systems intended for use in potentially explosive atmospheres.
Zone 2, Category 3, Group II G, Ex ec IIC T4

Other European and International Compliance
Compliance with the following European Directives or standards does not qualify this product for application of the CE Marking:

RoHS Directive: Restriction of Hazardous Substances 2011/65/EU:
This product is intended to be sold and used only as equipment which is specifically designed, and is to be installed, as part of another type of equipment that is excluded or does not fall within the scope of this Directive, which can fulfil its function only if it is part of that equipment, and which can be replaced only by the same specifically designed equipment, and therefore fulfills the requirements stated in Art.2.4(c) and as such is excluded from the scope of the Directive.

North American Compliance
These listings are limited only to those units bearing the Intertek identification:

Intertek: Intertek listed for Ordinary Locations, for use in Canada and the United States.

Intertek
5012634
Conforms to UL STDs 61010-1, 61010-2-201, and ANSI/CAN/UL/ULC STD 6200.
Certified to CSA STDs C22.2#61010-1-12, #61010-2-201.

Released

Cyber Security

For MicroNet XT Controls, Cyber Security information may be found in manual 35219 V4.

Special Conditions for Safe Use

This equipment is to be installed by professional service personnel according to the instructions given in this manual.

The MicroNet XT Control shall not be installed in areas where the microenvironment exceeds Pollution Degree 2, as defined in IEC 60664-1.

The MicroNet XT Control shall not be installed in areas that exceed Overvoltage Category II.

A fixed wiring installation is required and must be in accordance with the local electrical code regulations. PERMANENTLY CONNECTED EQUIPMENT requires the special considerations to satisfy IEC 61010-1, including overcurrent and fault protection as required. Protective Earth Grounding is required by the PE terminals (see Installation Chapter). Verify the PE terminal has been connected prior to applying power to the cabinet.

A disconnection device is not supplied with the system. A disconnecting switch or circuit breaker shall be included in the building installation. It shall be near the equipment and within easy reach of the operator. This device shall be clearly marked as the disconnecting device for the equipment. The disconnecting switch or circuit breaker shall not interrupt the protective earth conductor.

Field wiring must be suitable for at least T_{amb}+10°C.

CPU modules contain single cell primary batteries. These batteries are not to be charged and are not customer replaceable.

For proper airflow, the chassis should be mounted in the horizontal position with the ventilation holes of the modules on top and bottom of the system. The installation should allow a 3” (8 cm) air gap above and below the chassis. The T_{amb} inside the cabinet measured 1” (2.54cm) in front of the MicroNet XT panel must stay under 70˚C.

For environmental specifications, please refer to Appendix A of this manual.

⚠WARNING

EXPLOSION HAZARD—Do not connect or disconnect while circuit is live unless area is known to be non-hazardous.

Substitution of components may impair suitability for Class I, Division 2 and Zone 2 applications.

Do not remove or install modules while circuit is energized unless area is known to be non-hazardous.

Released

⚠ AVERTISSEMENT

RISQUE D'EXPLOSION—Ne pas raccorder ni débrancher tant que l'installation est sous tension, sauf en cas l'ambiance est décidément non dangereuse.

La substitution de composants peut rendre ce matériel inacceptable pour les emplacements de Classe I, applications Division 2 et Zone 2.

Ne pas enlever ni installer les cartes pendant que le circuit est sous tension à moins de se trouver dans un emplacement non dangereux.

Safety Symbols


Direct current


Alternating current


Both alternating and direct current


Caution, risk of electrical shock


Caution, refer to accompanying documents


Protective conductor terminal


Frame or chassis terminal


Earth (ground) terminal

Special Conditions for Electro-Magnetic Compatibility (EMC)

Installation must be provided by professional service personnel according to the instructions given in this manual.

IMPORTANT

EMC Compliance

The MicroNet XT Control must be installed inside a metal enclosure or cabinet to meet the EMC Directive requirements. Reference Chapter 10 for considerations regarding the installation location and specific cabinet construction requirements.

Grounding, bonding, and shielding must be implemented according to the instructions given in this manual.

Power provided by the Control for field devices must not be used for any purpose other than the defined IO function supported. Examples include Loop Power, Relay & Contact Power, Speed Probe Power, etc.

Released

Chapter 1.
General Information

1.1. Introduction

The MicroNet XT Control is a digital controller that is programmable for many types of applications in the control of:

- Gas and steam turbines
- Gas and diesel engines
- Hydro turbines
- Compressors
- Other process control

The MicroNet XT Control provides a flexible system to control any prime mover and its associated processes, such as high-speed control functions, system sequencing, auxiliary system control, surge control, monitoring and alarming, and station control.

The MicroNet XT Operating System, together with Woodward's Graphical Application Program (GAP), produces a powerful control environment. Woodward's unique rate group structure ensures that control functions will execute deterministically at rate groups (time intervals) defined by the GAP application. Critical control loops can be assigned to the five millisecond rate group. Less critical code is typically assigned to slower rate groups. The rate group structure prevents the possibility of changing system dynamics by adding additional code. Control is always deterministic and predictable.

The quantity and type of signal interfaces supported is determined by the chassis I/O module layout. The MicroNet XT Control is designed to accept any I/O module in any available chassis slot. The total quantity of system input and output signals is customized for the target application.

Communications with the MicroNet XT Control are available to program and service the control as well as to interface with other systems (Plant DCS, HMI, etc.). Application code is generated by use of Woodward's GAP programming environment. A service interface allows the user to view and tune system variables, several tools are available to provide this interface. Communication protocols such as OPC, Modbus, and other protocols are included so that the user can interface the control to existing or new plant level systems.

The MicroNet XT Control is available in a 14 slot chassis. Each chassis has dedicated slots for the power supply module and CPU module. The power supply architecture supports simplex or redundant power supply modules and CPUs.

1.2. Specifications and Compatibility

For environmental specifications and MicroNet XT Control compatibility information, please refer to Appendix A and Appendix B of this manual.

Released

Chapter 2.
MicroNet XT Control Systems

2.1. MicroNet XT Configurations

The MicroNet XT can be configured for simplex (single CPU) or redundant (dual CPU) operations, providing enhanced flexibility to meet various availability requirements. In configurations where multiple chassis are necessary, a combination of simplex and redundant CPUs can be implemented to optimize both performance and availability. All remaining slots in the 14-slot chassis are designed to accept any combination of I/O modules, allowing for customization based on specific operational needs. System expansion is supported through copper or fiber optic cables, which connect an additional chassis to accommodate increased I/O demands. The chassis configuration, including CPU arrangement and I/O module assignment, is defined within Woodward's GAP programming environment, ensuring that the system layout is precisely tailored to the application requirements.

Table 2-1. MicroNet XT Configurations

	Main and Expansion Chassis Configurations	
System Config	Main Chassis	Optional Expansion Chassis
Full Redundancy	Redundant CPUs	Redundant RTNs
Partial Redundancy	Redundant CPUs	Single RTN
Simplex	Single CPU	Single RTN

2.2. MicroNet XT Simplex CPU Systems

The MicroNet XT Simplex CPU Systems are designed to provide reliable and efficient control for applications where a single CPU configuration is sufficient. These systems offer straightforward installation and maintenance, making them well-suited for facilities that require robust performance without the complexity of redundant CPUs. The architecture ensures seamless integration with the existing I/O modules and power supply configurations, supporting both expansion and scalability as operational demands evolve.

A MicroNet XT Control system requires, at minimum, a chassis, power supply, CPU, and I/O modules. Systems utilizing a single CPU are designated as simplex systems; however, the architecture permits the incorporation of additional components to introduce redundancy in specific areas, thereby enhancing overall system availability. This section provides examples illustrating these approaches. When the demand for I/O modules exceeds the available slots, the MicroNet XT system supports the integration of a single expansion chassis, connected to the main chassis via an Ethernet network.

2.2.1. Simplex System Configuration

- 14-Slot Chassis
- Single CPU for simplex operation
- Simplex or Redundant I/O modules
- Simplex or Redundant Power Supplies
- Optional expansion chassis for additional I/O modules
- Single RTN module for simplex operation in the expansion chassis

Released

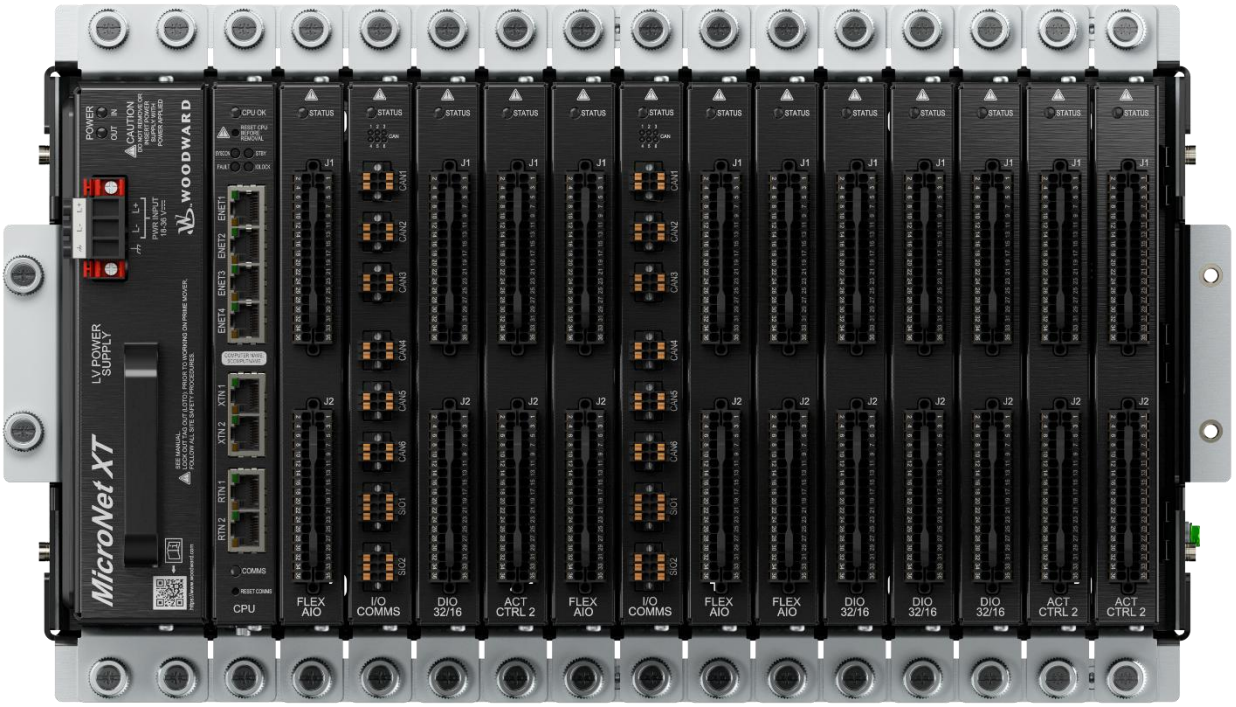

Figure 2-1. MicroNet XT Control with Simplex CPU

2.2.2. MicroNet XT Simplex System Networking

The optional expansion chassis replaces the CPUs with RTN modules in the A1 CPU slot. These RTN modules function as data relays, transmitting information back to the main CPUs. The expansion chassis can be networked either in a point-to-point configuration or through network switches, depending on system requirements. For additional details on networking options, refer to Chapter 6.1 and Volume 3 of this manual - MicroNet XT Software.

Released

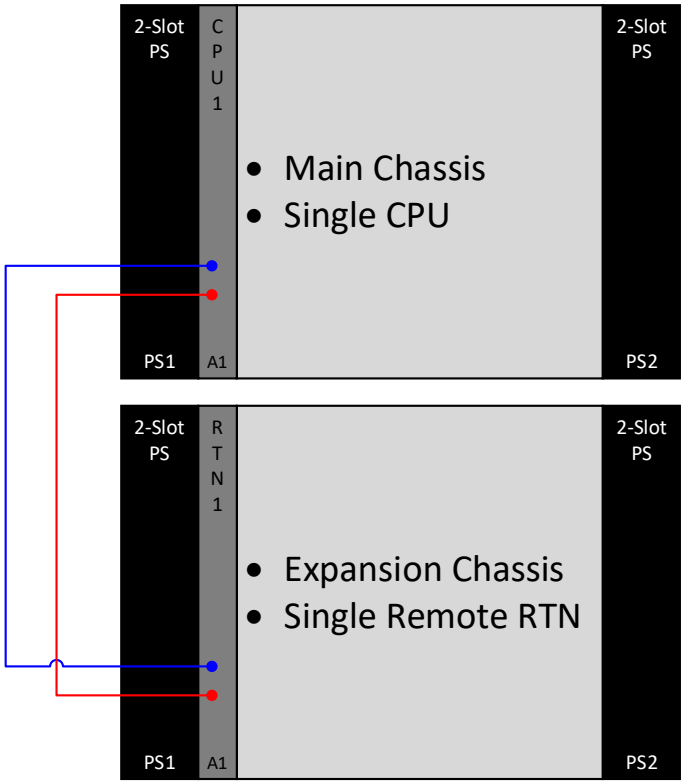

Figure 2-2. Simplex Expansion Chassis Network – Point-to-Point

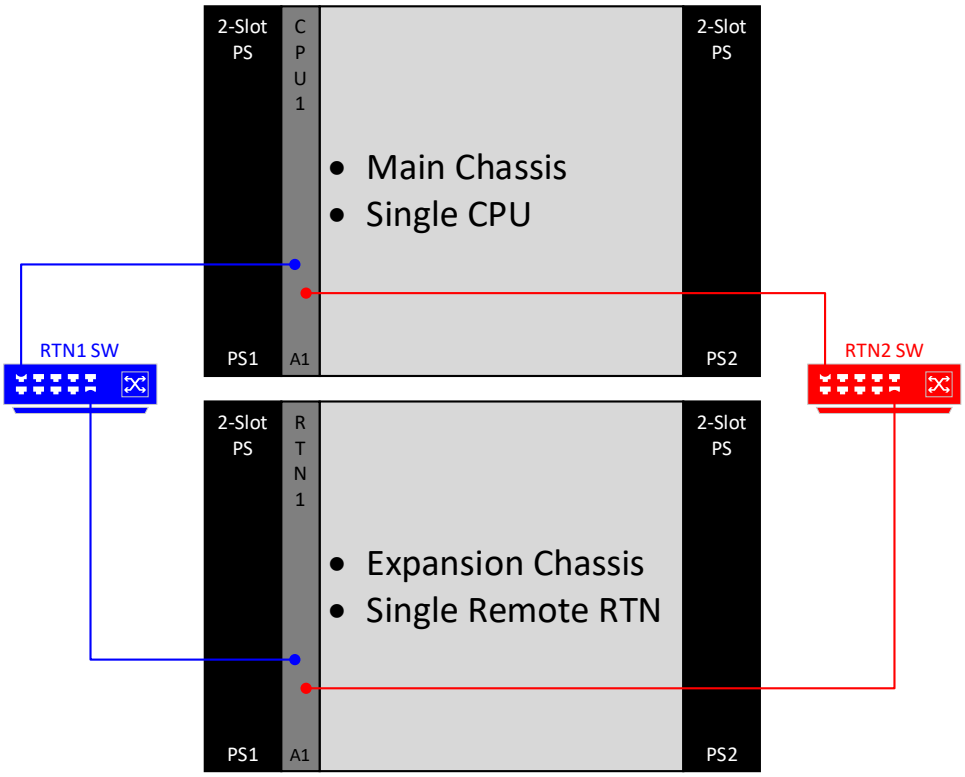

Figure 2-3. Simplex Expansion Chassis Network – With Switches

Released

NOTICE

The RTN network should only consist of control CPUs, Remote RTN modules, and network switches. No other devices should be on the control network. Loss of operations or data loss may occur, if non-authorized devices are connected to the network.

2.2.3. Redundant Power Supplies

Each MicroNet XT Control chassis supports using simplex or redundant power supplies. When redundant power supplies are used, they will operate in a load sharing mode, providing redundant power to all CPU's and I/O modules in the chassis. The MicroNet XT power supplies are 2 slots wide and are located at each end of the chassis in the slots designated as PS1 and PS2.

2.2.4. Simplex CPU

The MicroNet XT Control system used in simplex mode must have a single CPU module that is located in slot A1 of the chassis.

2.2.5. Simplex Inputs and Outputs

Figure 2-4 shows the flow of analog and discrete input signals from the field to the application.

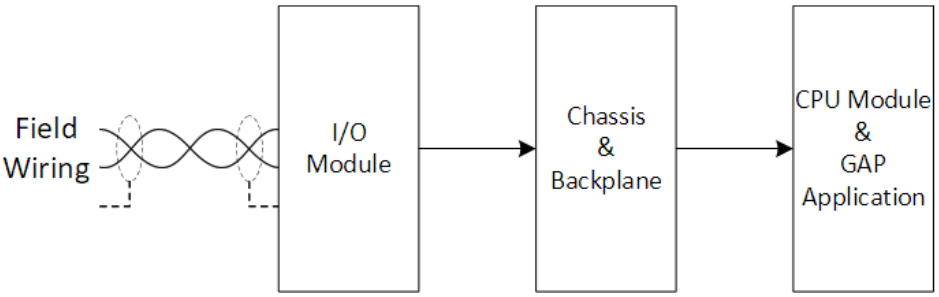

Figure 2-4. Input Flow

Figure 2-5 shows the flow of outputs from the application to the field.

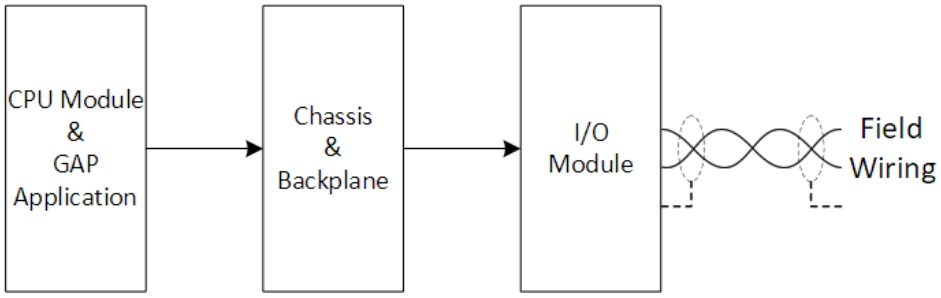

Figure 2-5. Output Flow

2.2.6. Redundant Inputs

Two levels of redundancy are available. The first involves wiring two external input devices to two separate input channels, see Figure 2-6. In the event of a failed sensor or a failure in the connection from the sensor to the control, a valid input is still available.

Released

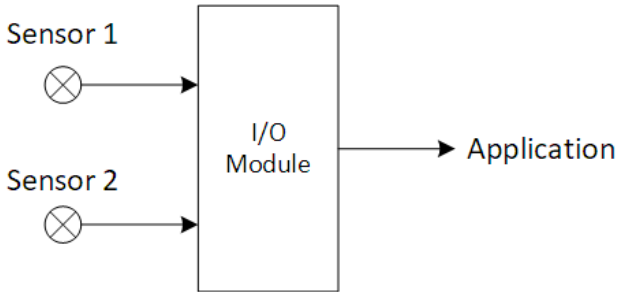

Figure 2-6. Redundant Sensors

The second level is wiring two external input devices to two separate I/O modules. See Figure 2-7. In the event of a failure in one of the sensors, connections, cables, or I/ O modules, a valid input is still available.

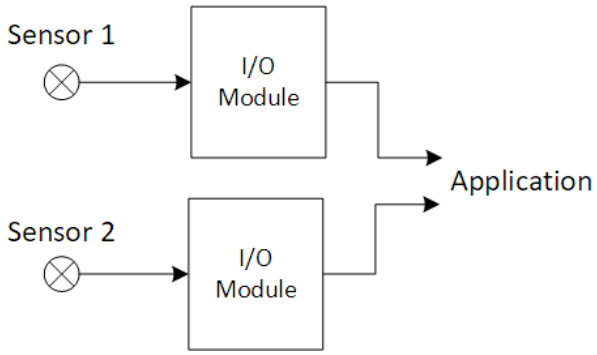

Figure 2-7. Redundant Inputs

This process can be expanded for triplicated inputs. With triplicated inputs, redundant inputs are available if an input fails. It is also possible to determine which input is not valid when using triplicated inputs. Because a redundant system can tolerate some single faults, it is possible for a fault to go undetected. Undetected faults are termed latent faults. If another fault occurs when a latent fault exists, the second fault could cause a shutdown. It is important to detect a latent fault in a redundant system so that it may be repaired before another fault occurs. Without a fully triplicated system it is not possible to detect all latent faults, however most faults can be detected. For single or redundant I/O points, fault detection is dependent on the application software to detect its I/O faults.

2.2.7. Redundant Outputs

Redundancy can be added to the outputs as well. Additional external relays can be used to prevent a faulted output from affecting the external device. For discrete outputs, this would require four relays for each output. For the actuator outputs, a dual coil actuator can be used. The dual coils will allow one coil to operate the actuator in the event of a failure.

The value of redundancy is dependent on the ability of the application to detect the failure. For analog and actuator outputs, current and/or voltage read back is provided. For discrete outputs, the driver circuit read back state is provided.

2.2.8. I/O Module Wiring Options

When designing and configuring a control system, there are two primary options for terminating field wiring to the I/O modules. The first option is to terminate field wiring directly to the front of the I/O module using the front connector plugs. This approach is particularly beneficial for installations where space is limited or cost is a significant factor, as it eliminates the need for additional components and streamlines the wiring process.

Alternatively, if remote wiring is preferred, a DIN rail mounted Field Termination Module (FTM) can be utilized in combination with an FTM cable. FTMs provide a more convenient method for managing wiring,

Released

as they simplify organization and can accommodate additional grounding schemes to enhance system maintenance.

It is important to note that the same I/O module part number is compatible with both direct wiring and FTM wiring methods. Furthermore, any combination of these two approaches may be employed within a single module or throughout the overall system, offering flexibility to meet specific installation requirements.

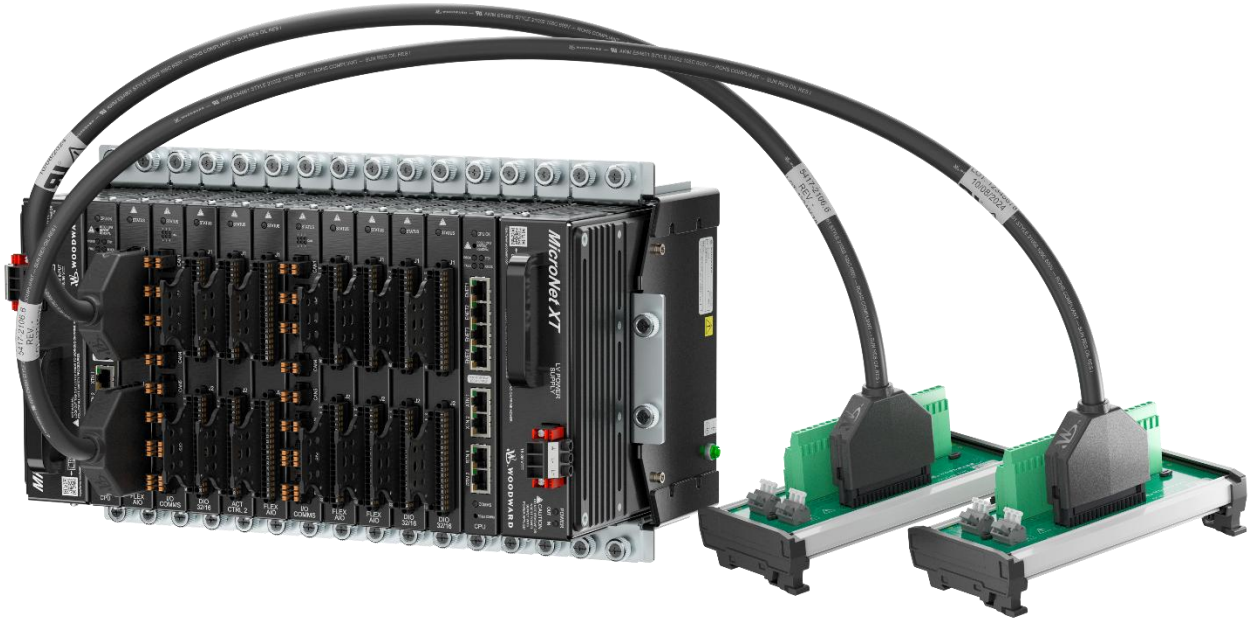

Figure 2-8. I/O Module Wiring Options for Simplex Systems

2.2.9. MicroNet XT Simplex Operation

In a simplex application with only 1 CPU in the main chassis, the CPU must be placed in slot A1. These slot designations are labeled on the backplane of all chassis.

Initially loading the GAP application:

- Using AppManager, establish a connection to the CPU and load the .PROG file onto the CPU (using the 'Send files to applications folder command under the Control menu)
- Use the 'Start selected application' button to launch the application and verify that the CPU boots up correctly. This will take about 1 minute and the CPU OK, COMMS, and SYSCON indication LEDs should all be green. All the STATUS LEDs on the I/O modules should also be green.
- When this status is reached, the GAP application will be placed in Auto-Start for all future power-up cycles of the system

All future power-ups of the control system:
(Regardless of the size of the GAP application, main chassis boot-up only takes about 1 minute)

- Upon powering up the system, the GAP application will Auto-Start.
- This will take about 1 minute and the CPU OK, COMMS, and SYSCON indication LEDs should all be green. All the STATUS LEDs on the I/O modules should also be green.
  - If the CPU has no application running, it will boot-up with CPU OK and COMMS LED's green, but the FAULT and IOLOCK LED will be red

2.3. MicroNet XT Redundant CPU Systems

2.3.1. Redundant CPU Theory

The MicroNet XT control system supports a configuration where two CPU modules are installed within a single chassis to operate as a redundant pair. In this arrangement, one CPU acts as the System Controller (SYSCON), managing chassis operations, while the second CPU serves as a hot backup

Released

(STANDBY). Both CPUs run the identical application program, receive power from the same backplane pins, and share access to all I/O modules via the common data bus. The CPU modules continuously communicate their health status over the backplane bus and arbitrate for control of the bus. Typically, the CPU located in the leftmost slot (A1) initializes first with good health and assumes the SYSCON role. The backup CPU remains in standby, receiving all relevant state information from the SYSCON, and ensuring it is ready to take control of the I/O modules if needed.

Switchover from the SYSCON CPU to the backup STANDBY CPU can be triggered by several conditions, including failure of the onboard CPU module power supplies, processor core failures (such as issues with processor, RAM, flash, oscillator, or internal circuitry), reset events initiated via the front panel or remotely, application-requested switchovers, or an application stop. This redundancy mechanism ensures continued system operation and availability in the event of hardware or software failures.

2.3.2. Redundant System Diagrams

- 14-Slot Chassis
- Two CPUs for redundant operation
- Simplex or Redundant I/O modules
- Simplex or Redundant Power Supplies
- Optional expansion chassis for additional I/O modules
- Two RTN modules for redundant operation of the expansion chassis

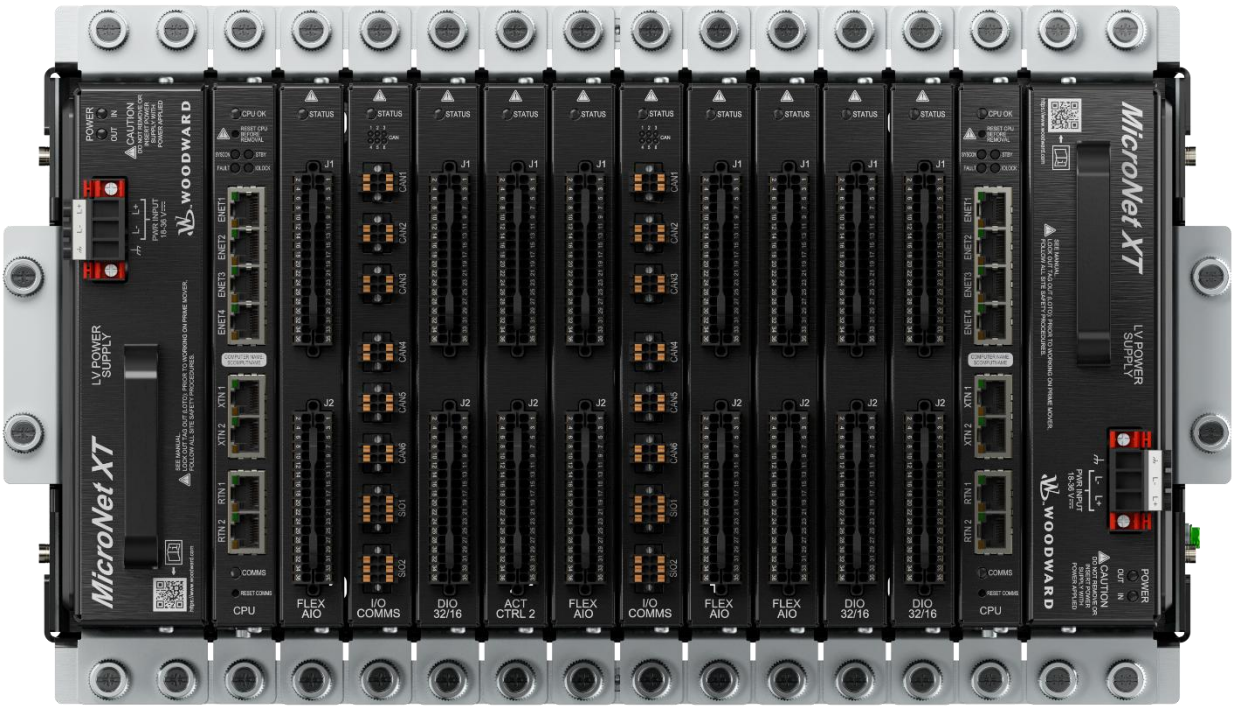

Figure 2-9. MicroNet XT Control with Redundant CPUs

2.3.3. MicroNet XT Redundant System Networking

The optional expansion chassis replaces the CPUs with RTN modules in the CPU slots. These RTN modules function as data relays, transmitting information back to the main CPUs. The expansion chassis can be networked either in a point-to-point configuration or through network switches, depending on system requirements. For additional details on networking options and considerations, refer to Volume 3 of this manual - MicroNet XT Software Tools.

Released

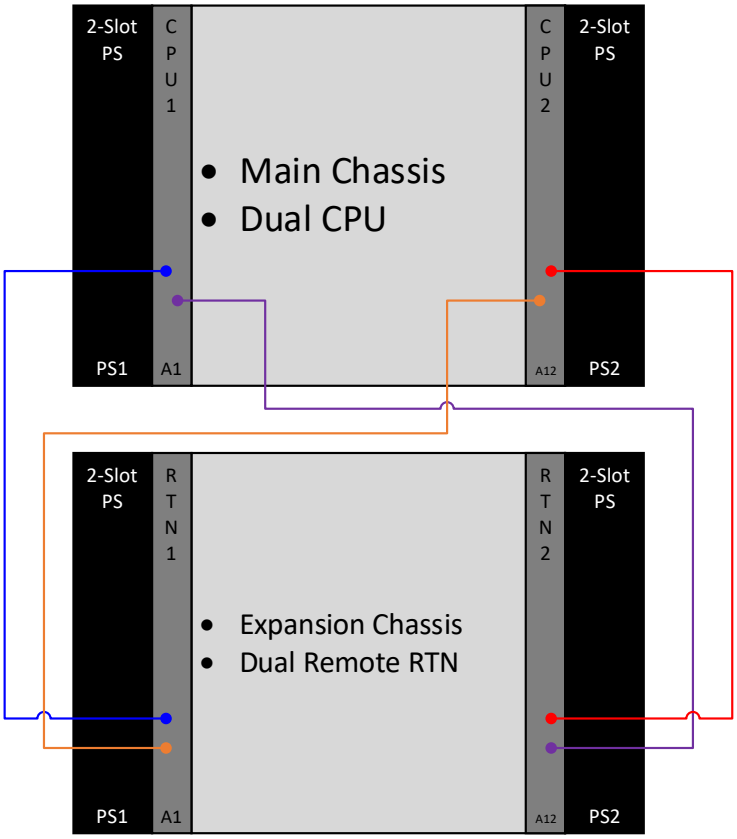

Figure 2-10. Redundant Expansion Chassis Network – Point-to-Point

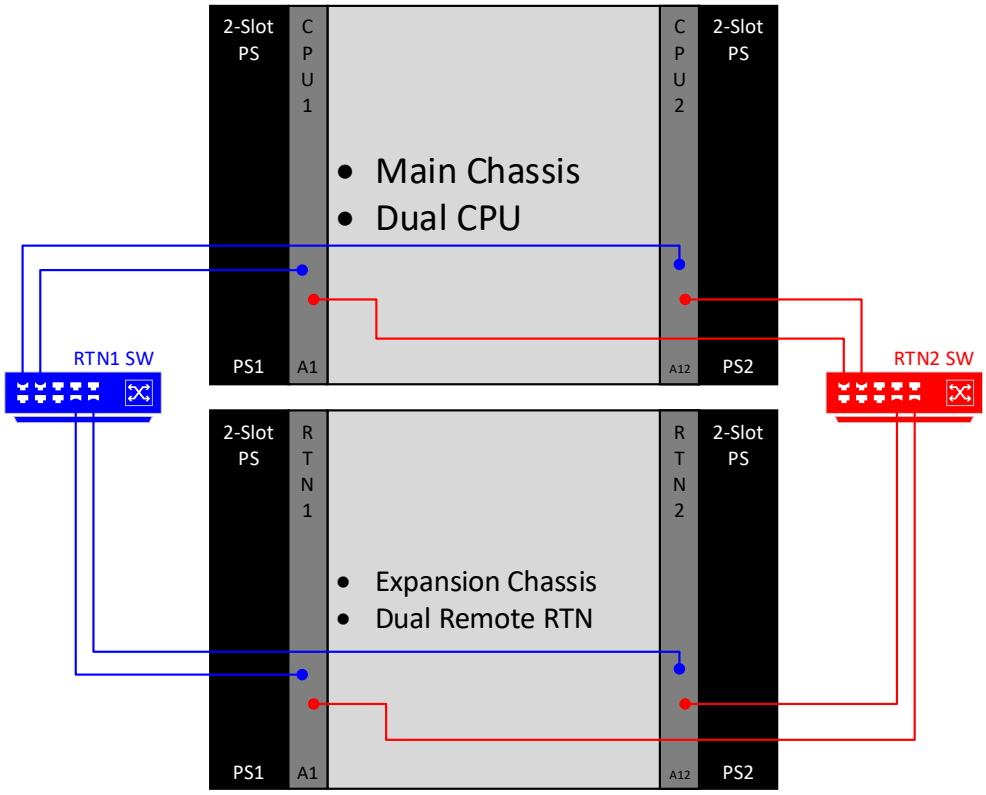

Figure 2-11. Redundant Expansion Chassis Network – With Switches

Released

NOTICE

The RTN network is designed to maintain reliable communication and operation within the MicroNet XT control system. It should be composed exclusively of control CPUs, Remote RTN modules, and network switches.
To ensure system integrity and prevent potential operational disruptions, no other devices should be connected to the control network. Connecting unauthorized devices can result in loss of operations or data, jeopardizing the system's stability and reliability.

2.3.4. Redundant Power Supplies

Each MicroNet XT Control chassis supports using simplex or redundant power supplies. When redundant power supplies are used, they will operate in a load sharing mode, providing redundant power to all CPU's and I/O modules in the chassis. The MicroNet XT power supplies are 2 slots wide and are located at each end of the chassis in the slots designated as PS1 and PS2.

2.3.5. Redundant CPUs

The MicroNet XT Control system used in redundant mode must have a two CPU modules that are located in slot A1 and A12 of the 14-slot chassis.

2.3.6. Simplex Inputs and Outputs

Figure 2-12 shows the flow of analog and discrete input signals from the field to the application.

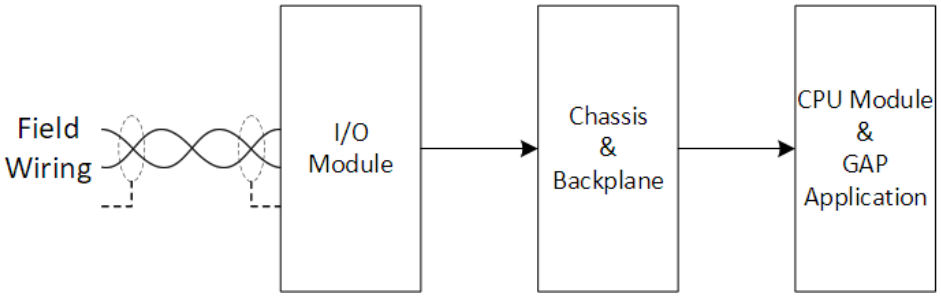

Figure 2-12. Input Flow

Figure 2-13 shows the flow of outputs from the application to the field.

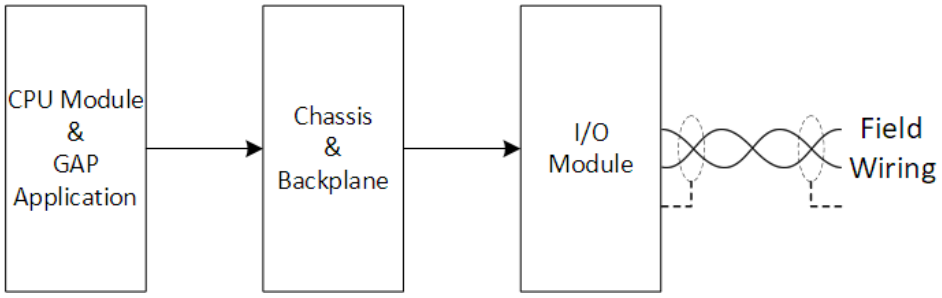

Figure 2-13. Output Flow

2.3.7. Redundant Inputs

Two levels of redundancy are available. The first involves wiring two external input devices to two separate input channels, see Figure 2-14. In the event of a failed sensor or a failure in the connection from the sensor to the control, a valid input is still available.

Released

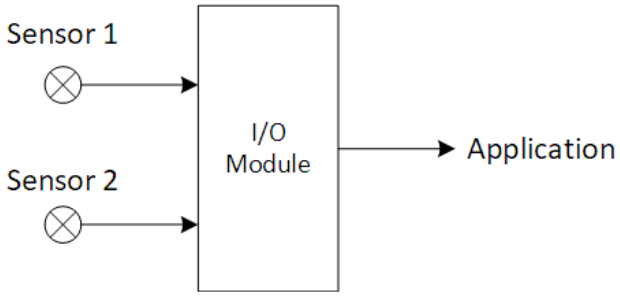

Figure 2-14. Redundant Sensors

The second level is wiring two external input devices to two separate I/O modules. See Figure 2-15. In the event of a failure in one of the sensors, connections, cables, or I/ O modules, a valid input is still available.

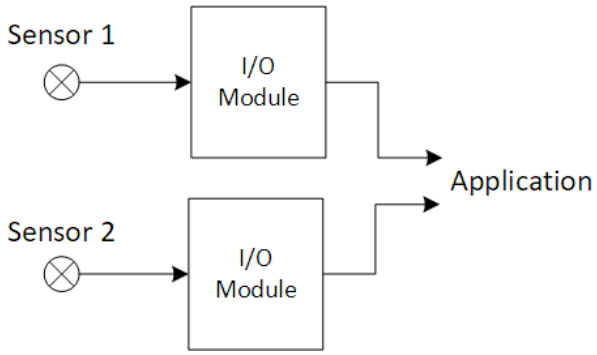

Figure 2-15. Redundant Inputs

This process can be expanded for triplicated inputs. With triplicated inputs, redundant inputs are available if an input fails. It is also possible to determine which input is not valid when using triplicated inputs. Because a redundant system can tolerate some single faults, it is possible for a fault to go undetected. Undetected faults are termed latent faults. If another fault occurs when a latent fault exists, the second fault could cause a shutdown. It is important to detect a latent fault in a redundant system so that it may be repaired before another fault occurs. Without a fully triplicated system it is not possible to detect all latent faults, however most faults can be detected. For single or redundant I/O points, fault detection is dependent on the application software to detect its I/O faults.

2.3.8. Redundant Outputs

Redundancy can be added to the outputs as well. Additional external relays can be used to prevent a faulted output from affecting the external device. For discrete outputs, this would require four relays for each output. For the actuator outputs, a dual coil actuator can be used. The dual coils will allow one coil to operate the actuator in the event of a failure.

The value of redundancy is dependent on the ability of the application to detect the failure. For analog and actuator outputs, current and/or voltage read back is provided. For discrete outputs, the driver circuit read back state is provided.

2.3.9. I/O Module Wiring Options

When designing and configuring a control system, there are two primary options for terminating field wiring to the I/O modules. The first option is to terminate field wiring directly to the front of the I/O module using the front connector plugs. This approach is particularly beneficial for installations where space is limited or cost is a significant factor, as it eliminates the need for additional components and streamlines the wiring process.

Alternatively, if remote wiring is preferred, a DIN rail mounted Field Termination Module (FTM) can be utilized in combination with an FTM cable. FTMs provide a more convenient method for managing wiring,

Released

as they simplify organization and can accommodate additional grounding schemes to enhance system maintenance.

It is important to note that the same I/O module part number is compatible with both direct wiring and FTM wiring methods. Furthermore, any combination of these two approaches may be employed within a single module or throughout the overall system, offering flexibility to meet specific installation requirements.

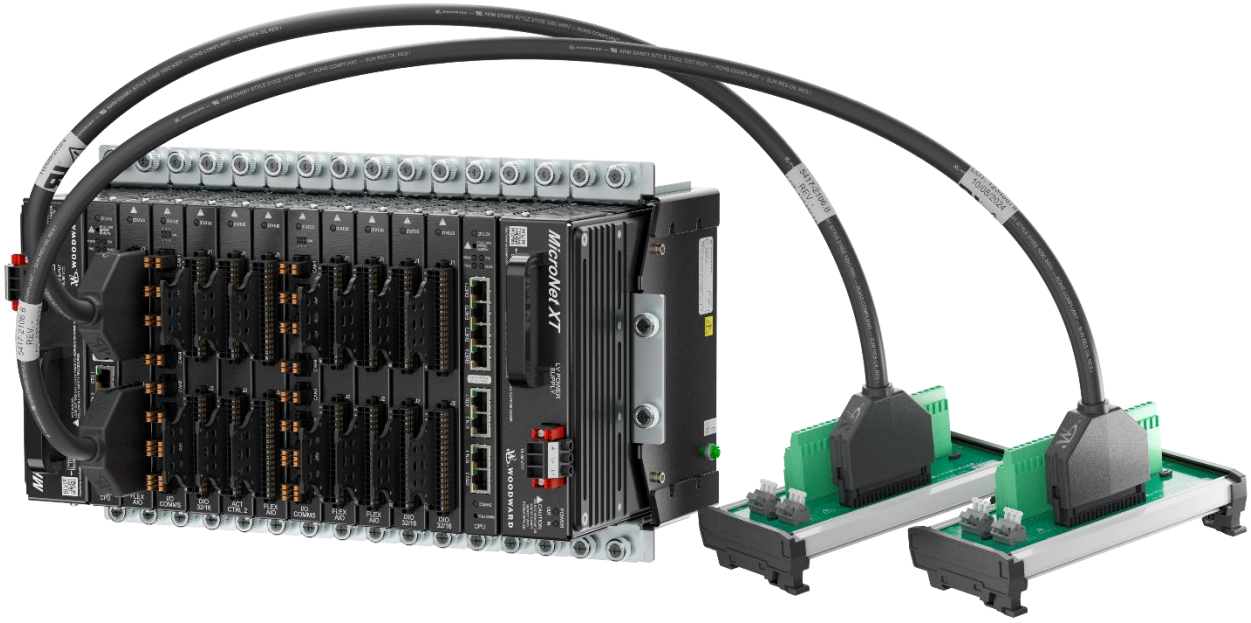

Figure 2-16. I/O Module Wiring Options for Redundant Systems

2.3.10. MicroNet XT Redundant Operation

In a simplex application with only 1 CPU in the main chassis, the CPU must be placed in slot A1. These slot designations are labeled on the backplane of all chassis.
To use the MicroNet XT for redundant operation, the second CPU must be placed in slot A12 of the 14-slot chassis. In the control system documentation, we typically refer to these as the ‘Left CPU’ and ‘Right CPU’. Refer to volume 3 of this manual on how to modify the GAP application for CPU redundancy.

Initially loading the GAP application and establishing redundancy:

- Using AppManager, establish a connection to the ‘Left CPU’ and load the .PROG file onto the CPU (Using the ‘Send files to applications folder’ command under the Control menu)
- Use the ‘Start selected application’ button to launch the application and verify that the CPU boots up correctly. This will take about 1 minute and the CPU OK, COMMS, and SYSCON indication LEDs should all be green.
- Using AppManager, establish a connection to the ‘Right CPU’ and load the exact same .PROG file onto the second CPU
- Use the ‘Start selected application’ button to launch the application and verify that the ‘Right CPU’ boots up correctly. This will take about 10 seconds, and the CPU OK and COMMS indication LEDs should be green, and the STBY LED should be yellow (amber) on both the left and the right CPUs.
- When this status is reached, the CPUs have successfully synchronized and are running in redundant mode where the SYSCON is the primary CPU and the STBY module is ready to take over upon a fault or application triggered command. This GAP application will be placed in Auto-Start on both CPUs for all future power-up cycles of the system

All future power-ups of the control system:
(Regardless of the size of the GAP application, main chassis boot-up only takes about 1 minute.)

- With both CPUs present in the main chassis – the ‘Left CPU’ will be SYSCON, and the ‘Right CPU’ will be STBY. Healthy CPU redundancy of the control is always indicated by the STBY LED being lit on both CPUs.

Released

- If only 1 of the CPUs is present in the main chassis – it will establish itself as the SYSCON and the STBY LED will be off.
- If the second CPU is inserted into a running system – one of these results will occur:
  - If this CPU has the exact same application in auto-start, it will boot-up and synchronize with the SYSCON CPU and healthy redundancy will be established
  - If this second CPU has no application running, it will boot-up with CPU OK and COMMS LED's green, but the FAULT and IOLOCK LED will be red. The STBY LED will be off.
  - If this second CPU has a different application in auto-start, it will boot-up with COMMS LED green, the FAULT LED red, and the CPU OK LED will pulse red with a flash code of 3,4 (see 'Flash Code Table in this manual for full flash code error descriptions.

Released

Chapter 3.
Chassis Configurations

The MicroNet XT Control system is developed around the chassis, power supply module(s), and CPU module. The MicroNet XT supports connectorized field wiring through module connectors. The terminal connectors are keyed for orientation to prevent incorrect insertion when plugging into the module J-connector ports.

The MicroNet XT does not include or require fans for cooling; module cooling is accomplished through thermally conductive heat-sinking on the modules. The 14-slot chassis is shown in Figure 3-1.

Table 3-1. MicroNet XT Chassis Part Numbers

Description	Part Number
MicroNet XT 14 Slot Chassis	5453-1219
Blank Slot Cover Plate	5466-1323

3.1. MicroNet XT 14-Slot Chassis

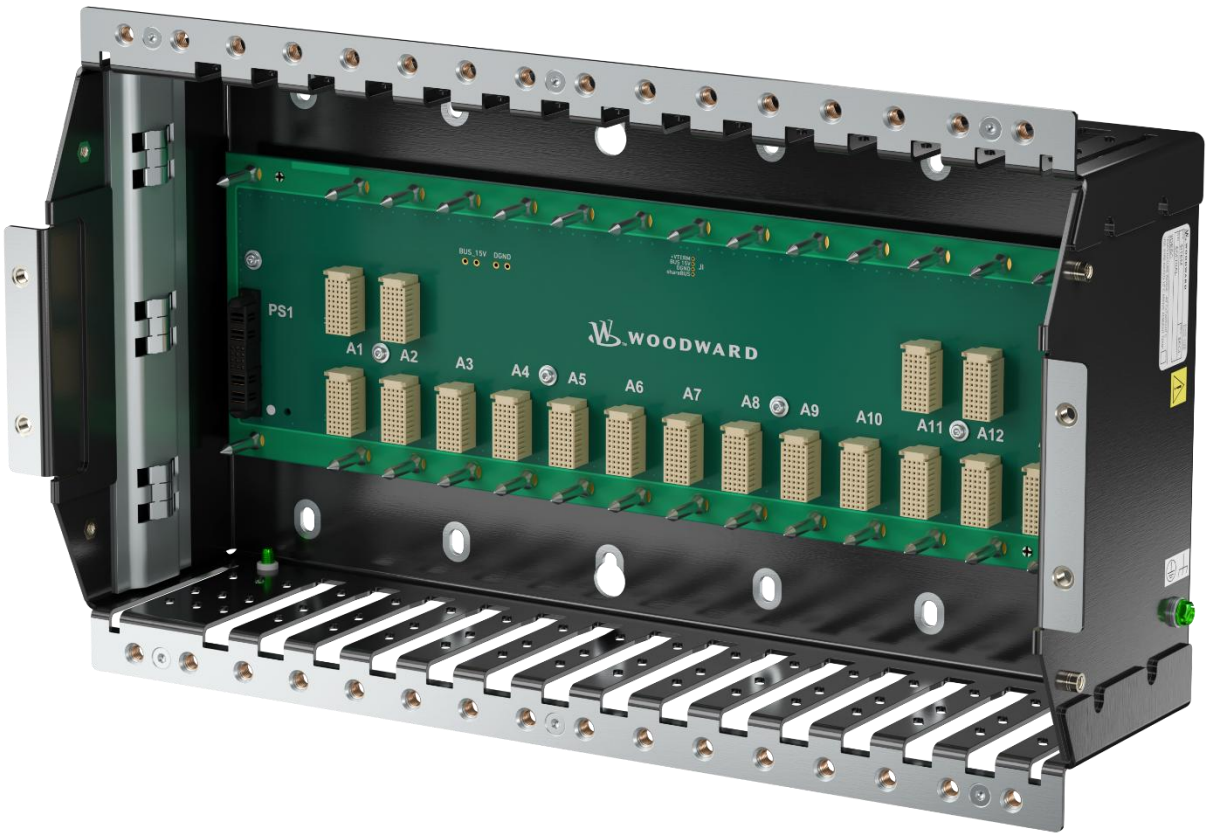

Figure 3-1. MicroNet XT 14-Slot Chassis

3.1.1. Specifications

The MicroNet XT chassis includes a backplane inserted in the back of the assembly to make connections between the power supplies, CPUs, and I/O modules. See Figure 3-1. Slot-to-slot logic and power connections are made through an etched-circuit backplane. Field I/O connections are made through the front of the modules.

Released

3.1.1.1. Power Supply Slots (PS1, PS2)

The MicroNet XT system uses one or two 2-slot wide power supplies.

The first power supply module goes in the left side of the chassis in the slots designated as PS1.

If redundant power supply modules are desired, the second supply must be placed in the slots designated as PS2, slots A13 and A14 on the right side of the chassis. A13 and A14 can be used for additional I/O modules if redundant power supply modules are not used. Note that the redundant power supply module must be flipped upside down when inserting into the PS2 slot.

3.1.1.2. CPU Slots (A1)

The MicroNet XT simplex system uses a single CPU module which must be inserted into the first slot to the right of PS1, which is labeled A1.

3.1.1.3. I/O Module Slots (A2 through A14)

The I/O modules plug into the remaining slots of the chassis, A2 through A12. A13 and A14 can be used for I/O modules if redundant power supply modules are not used. Live insertion and removal is supported for field repairability.

Any I/O module can be installed in any of the slots designated for I/O modules. However, when the application software is designed, each module will be assigned to a specific slot and thereafter, the software will expect that specific I/O module to always be in its designated slot.

All unused chassis slots need to be covered with a blanking plate to maintain signal integrity and protect the backplane of the chassis. See Table 3-1 for part number information.

3.1.2. Chassis Outline Drawing

The MicroNet XT 14-slot chassis size is 18.100 in. (46 cm) wide by 10.280 in. (26.1 cm) high by 4.980 in. (12.65 cm) deep (without modules) for MicroNet XT. Refer to Figure 3-2. Figure 3-3 shows the mounting footprint dimensions for designing the mounting panels.

For proper airflow, the chassis should be mounted in the horizontal position with the ventilation holes of the modules on top and bottom of the system. The installation should allow minimum a 3” (8 cm) air gap above and below the chassis.

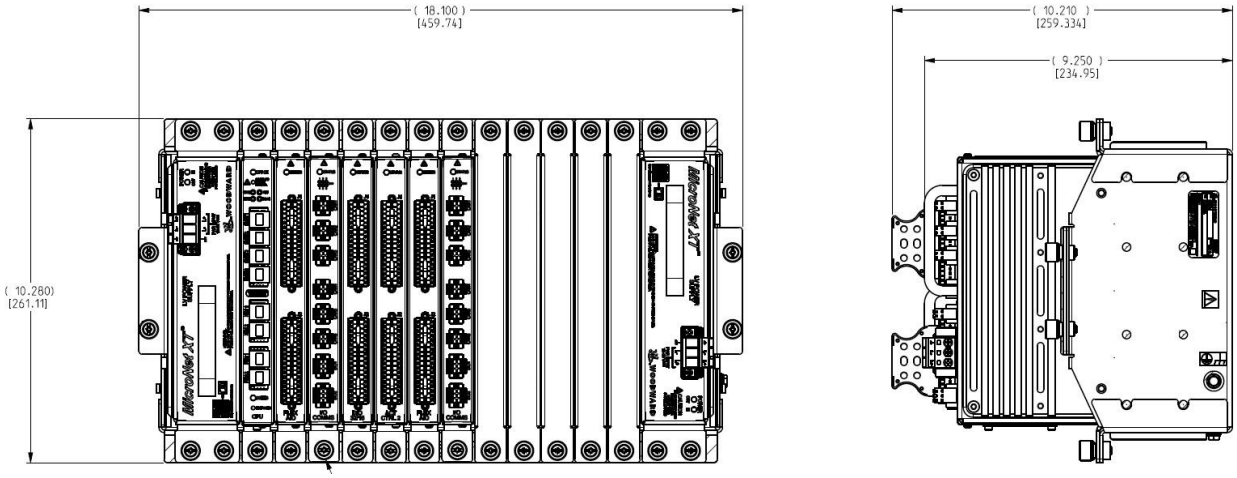

Figure 3-2. MicroNet XT 14-Slot Chassis Outline Drawing

Released

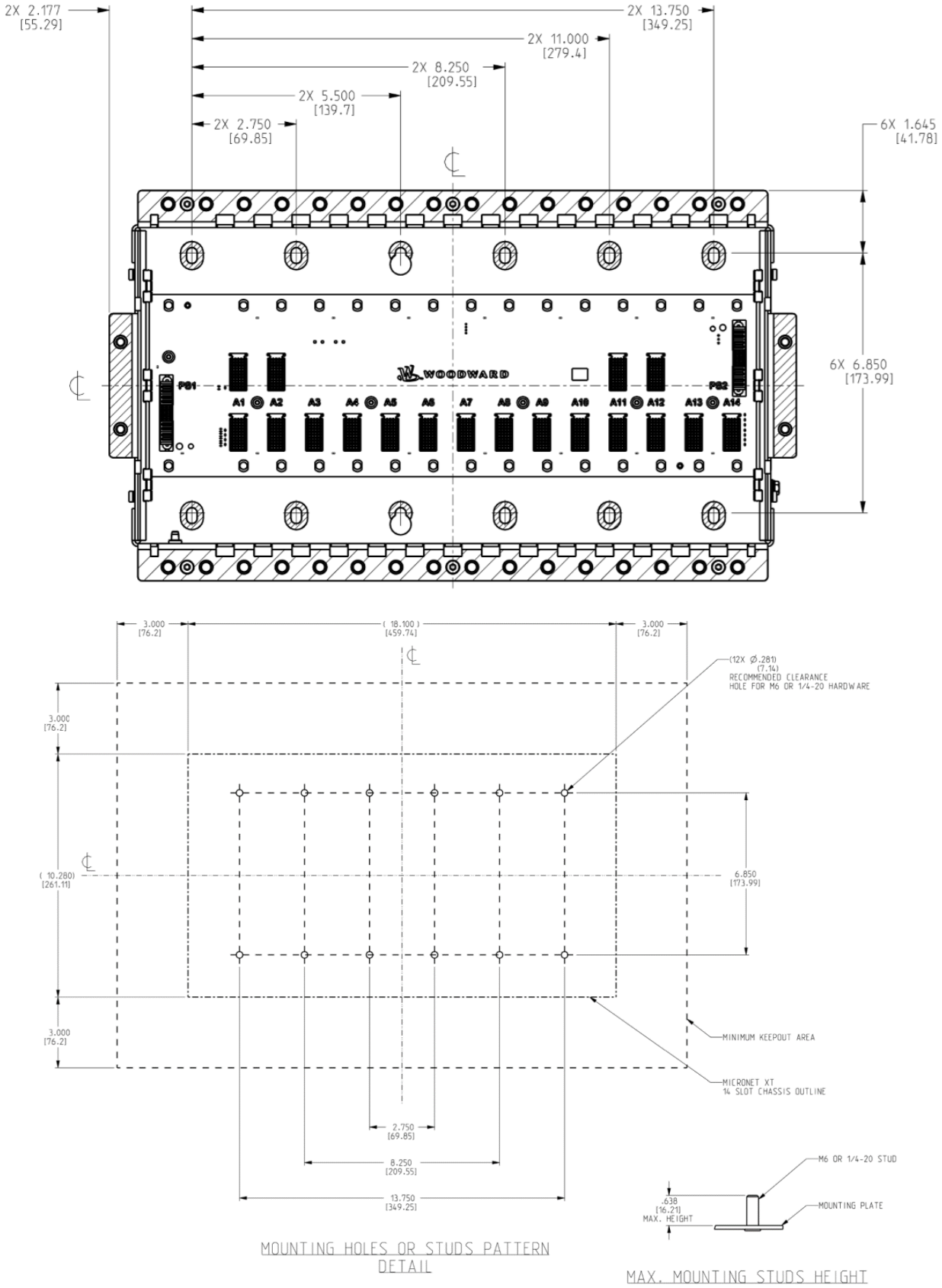

Figure 3-3. MicroNet XT 14-Slot Chassis Mounting Footprint Dimensions

Released

WARNING

To reduce the risk of electric shock, Protective Earth (PE) must be connected to the termination point either on the bottom or side of the unit next to the label with the Protective Earth symbol ⏚.

The conductor providing the connection must have a properly sized ring lug and wire gauge larger than or equal to 4 mm². The ring lug should be placed between the nut and star washer.

The calibration and checkout procedure should only be performed by authorized personnel. To be authorized personnel, personnel must be knowledgeable of the risks posed by live electrical equipment.

There are two ground connections on the XT chassis. The recommended ground connection point for the MicroNet XT Control is under the chassis, as shown in Figure 3-4. As an alternative, the ground on the side of the chassis can be used.



Figure 3-4. MicroNet XT 14-Slot Chassis Ground Locations

Released

IMPORTANT

EMC Compliance

The chassis of the control must also be electrically bonded to ground in order to maintain EMC compliance.

Electrical bonding is accomplished by providing a low impedance strap or large surface area contact between any two, or more, metal pieces or conductors: The rear of the control chassis frame is designed to be a low impedance bonding surface and bonding straps are low impedance if they are not longer than 5 times their width or surface area of the conductor.

Protective Earth (PE) termination points may be used to electrically bond the control chassis to the metal enclosure mounting panel.

The maximum impedance of MicroNet XT bonding straps is defined by a strap that is 1.25cm wide and 15cm long, made from small gauge tin plated copper wire that is braided into a hollow tube/cylinder and pressed flat. It is also defined as a 4 mm² gauge copper wire no longer than 7.5 cm, a 6 mm² gauge copper wire no longer 15 cm, etc.

To ensure EMC compliance, all chassis mounting screws (#1/4-20 or M6) should be installed to properly ground the chassis to the enclosure mounting plate. Torque the mounting screws to 10 Nm (88.5 lb-in). Reference Figure 3-3.

3.1.3. Troubleshooting

Each module contains a temperature sensor to monitor the board temperature of the I/O module. The temperature measurement range is -40 C to 150 °C, the accuracy is ± 2 °C at 25 °C and ± 4 °C over the ambient temperature range. This temperature is made available in the GAP program for each module, so that corrective actions can be taken if the temperature exceeds 90 °C. The MicroNet XT modules themselves will not initiate any fault outputs that are solely related to temperature. Note that all modules have tamper detection. Removing or damaging the seal on any module will void the warranty.

Released

Chapter 4.
Power Supplies

The MicroNet XT Control system supports the low voltage power supply module. Each power supply module is 2 slots wide and resides in the left 2 slots of the chassis for simplex power supply systems. Redundant power supply systems include a second power supply in the right 2 slots of the chassis.

Table 4-1. MicroNet XT Power Supply Part Numbers

Description	Part Number
MicroNet XT Low Voltage Power Supply (24 VDC)	5466-1320

Table 4-2. MicroNet XT Power Supply Connector Kits (Optional)

Description	Part Number
Replacement Screw Terminal Block Kit	8923-3209
Push-In Terminal Block Kit	8923-3215

4.1. MicroNet XT Control Power Supply Low Voltage 24 VDC

The two slot LVPS module is shown in Figure 4-1. MicroNet XT LVPS Module Each LVPS module produces a regulated 15 V output. A backplane located on the back of the chassis provides the LVPS module connection to the CPU modules, I/O modules, and redundant LVPS modules.

When redundant LVPS modules are used, current sharing circuitry balances the load.

Input power connections are made to the LVPS module through a plug/header on the front of the supply. The module comes from the factory with screw down connector terminals, if desired, an optional kit with push-in terminals can be purchased separately. See Table 4-2 for part number information. For MicroNet XT installation instructions, see Chapter 10 (Installation and Replacement Procedures). Each module has two bicolor LEDs. See Troubleshooting for a description of the LED indications.

Released



Figure 4-1. MicroNet XT LVPS Module

4.1.1. Specifications

IMPORTANT

For a particular system configuration, use the MicroNet XT Power Program to calculate the output current requirements as a function of the Chassis, CPUs, and I/O modules used in the system.

Released

Table 4-3. MicroNet XT LVPS Module Specification (24 VDC Input)

Operating Input Voltage Range	18 – 36 VDC
Operating Temperature Range	-40 °C to 70 °C
Nominal Rated Input Voltage	24 VDC
Maximum Input Current	25 A
Maximum Input Power	421W max @ 18Vdc 416W max @ 24Vdc 418W max @ 36Vdc
Input Power Fuse/Breaker Rating	32 A time delay
Maximum Output Power	375 W
Holdup Time (defined as the time from input power below 24 V to MicroNet XT System I/O out of spec)	5 ms at 24 VDC (nominal) with 375 W maximum power
Under Voltage Lockout Range	15.5 VDC - 16 VDC.
Input Voltage Startup Range	16 VDC - 17 VDC
Input Voltage Ripple	Less than 1.5 VAC 50 Hz – 1 kHz
Miswire Protection	Protected from damage if input power is applied with reverse polarity
Isolation	500 Vrms from primary power to secondary power, to chassis and from secondary power to chassis.
Input Power Connections	Maximum of 100 meters, refer to Input Power Wiring for wire gauge selection.

A functional block diagram of the module is shown in Figure 4-2.

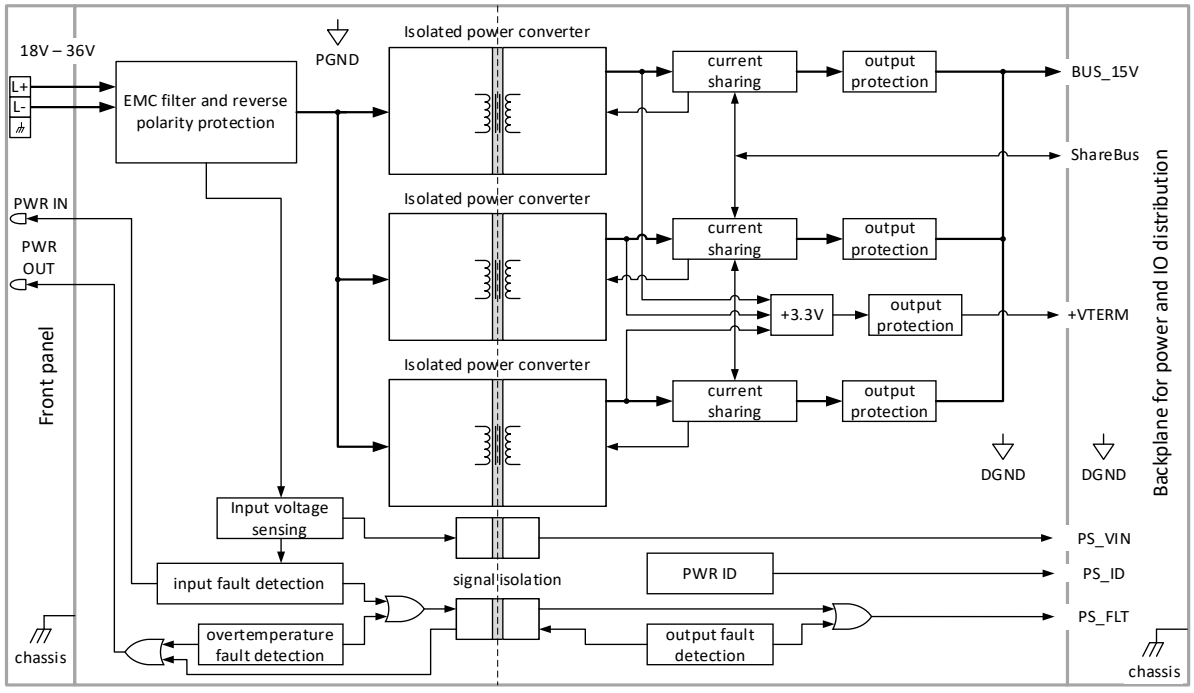

Figure 4-2. MicroNet XT LVPS Module Block Diagram

Released

4.1.2. Installation

The power supplies can only be installed into slots PS1 (LVPS #1) and PS2 (LVPS #2). If redundant power supplies are not needed, the additional chassis slots can be used for I/O modules. Refer to Figure 4-3.

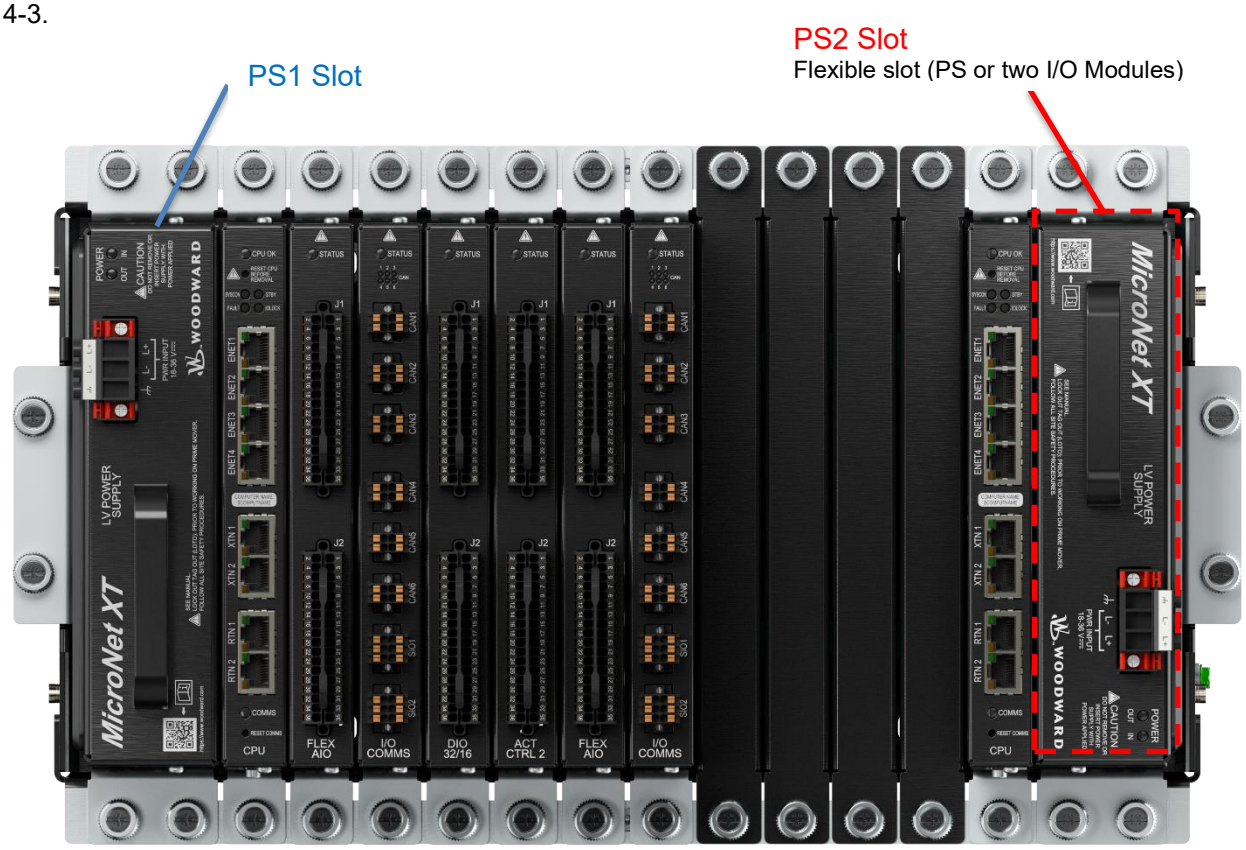

Figure 4-3. MicroNet XT LVPS Module Installation

When installing an LVPS module into slot PS1, the wiring terminal block needs to be located on the top side of the module. Note that when you install a redundant module into slot PS2, the module needs to be rotated 180° so that the wiring terminal block is now located on the bottom side of the module.

There are six screws that fasten each LVPS module to the chassis, each screw should be torqued to 6 Nm (53 lb-in) but can be hand-tightened. Torque the flange screws securing the connector to the power supply to 0.2 to 0.3 N·m (0.15 to 0.22 lb-ft). Torque the terminal screws to 0.5 to 0.6 N·m (0.37 to 0.44 lb-ft).

4.1.2.1. System Power-Up

If at any time during this procedure the defined or expected result is not achieved, begin system troubleshooting.

1. Verify that the entire MicroNet XT Control system has been installed.
2. Verify correct wiring and polarity on the connector.
3. For systems with a single LVPS module installed:
   3.1 Turn the power on to the LVPS module and verify that the POWER IN and OUT LEDs on front panel are green.
4. For systems with dual power supplies installed:
   4.1 Turn the power on to the first LVPS module and verify that the POWER IN and OUT LEDs on front panel are green.
   4.2 Turn the power on to the second LVPS module and verify that the POWER IN and OUT LEDs on front panel are green.

Released

4.3 Turn the power off to the first LVPS module and verify that the POWER IN and OUT LEDs on front panel of second LVPS module are still green.
4.4 Turn the power back on to the first LVPS module and verify that the POWER IN and OUT LEDs on both power supplies are green.

5. After at least one LVPS module is up, the CPU module Watchdog LEDs should turn off, and the status LED should go from red to green. At this time, the CPU is performing the self-diagnostic and boot-up processes. When the CPU has completed its diagnostic tests, all red LEDs on the CPU module and I/O modules should turn off, and the control will begin running the application program.

4.1.3. Input Power Wiring

NOTICE

The MicroNet XT LVPS modules must have the input power removed before installing or removing.

Wiring must be in accordance with local electrical code regulations.

The input power connections to LVPS module are shown in Table 4-4 and Figure 4-4.

Table 4-4. MicroNet XT LVPS Module Specification (24 VDC Input)

Pin	Signal	Description
1	L+	DC Input Voltage Positive Terminal
2	L-	DC Input Voltage Negative Terminal
3	⏚	Chassis



Figure 4-4. MicroNet XT LVPS Module Input Power Connection Diagram

Released

⚠WARNING

A PE ground conductor connected to the chassis is required for safety. The green/yellow grounding conductor must be the same size or larger than the main supply conductors but not less than 4.0 mm².

The power supply grounding terminal should also be connected to earth to ensure grounding of the power supply printed circuit boards.

Branch circuit fuses, circuit breakers, and wiring must meet appropriate codes and authorities having jurisdiction for the specific country (CE, UL, etc.). See Table 4-5 for maximum recommended fuse or breaker ratings. Do not connect more than one XT power supply to any one fuse or circuit breaker. Use only the wire sizes specified in Table 4-5, which meets local code requirements. Time delay fuses or circuit breakers should be used to prevent nuisance trips.

LVPS module power requirements depend on the number and type of modules supplied for each system. For a system with a single I/O chassis, size the input power source according to the rating of the MicroNet XT power supply to which the source is connected. Do not size the LVPS module input supply for the sum of the MicroNet XT power supply ratings when redundant supplies are used. MicroNet XT supplies are redundant when installed in the same chassis and share the load between them equally, but each must provide for full load in the event that one of the units is disabled. Appendix A gives the maximum overload protection for supply mains connected to any single or redundant pair of MicroNet XT main power supplies. It is not recommended that both MicroNet XT main power supplies of a redundant pair be connected to a single source, as failure of that source would disable the system.

Not all systems will require the full load capability of the MicroNet XT LVPS module. If not otherwise indicated on a cabinet system nameplate, either use the module input ratings for sizing the system's source or consult Woodward for determining the minimum source requirements.

Table 4-3 provides the LVPS module holdup time specification, which is the time the supply will continue to operate within specification after its input power is interrupted. This information may be useful in specifying uninterruptible power supply (UPS) systems.

Table 4-5. MicroNet XT LVPS Wiring Requirements

Input Voltage Range	Maximum Fuse/C.B. Rating (1) (Time Delay)	Maximum Input Power Consumption (2)	Max Wire Size L1/L2 Accept (3) AWG/mm
18-36 VDC	32A	421W	8/10

⚠WARNING

(1) It is up to the end installer to determine amperage rating that will be consumed by the MicroNet XT Control.

(2) At no time may the calculated MicroNet XT Control power consumption (total draw of CPU and I/O modules) exceed 110% of 375W.

(3) The amperage rating will be used to determine minimum C.B. and wire size to comply with the local electrical codes. Wire Insulation must be rated to the maximum internal cabinet temperature plus 10˚C (T_{amb}+10˚C).

The input power terminals accept wires from 2 to 10 mm² (14-8 AWG); however, the customer should size the wires to support system power consumption and reliability, and meet local wiring regulations.

Released

NOTICE

XT Power Supplies modules have been dielectric strength tested to the appropriate voltage. DO NOT TEST them again as it will damage the EMC protection devices on the input power port.

NOTICE

The XT Power Supplies module's power wires must remain in intimate contact with each other along their length: twisted together at a rate of at least one or two twists per meter is sufficient.

More than two twists per meter may also be used, up to ~30 twists per meter before there is no additional benefit of twist: i.e. enclosers with equipment sensitive to interference coexisting with the MicroNet XT.

NOTICE

Recommended Power Bus Structure: A three wire power bus provided to MicroNet XT from an isolated source. Isolated or not, the power buss dedicated to only the MicroNet XT is better for its EMC.

MicroNet XT's EMC is enhanced by the use of three wire power cables. The LV DC power supply uses the third wire, ground, for EMI noise reduction in installations with equipment sensitive to EMI on or near the buss. A power line filter may also be used. Examples: A DC PWM actuator drive often causes harsh EMI noise. Wireless receivers, vibration monitors, and thermal couple monitors may be sensitive to EMI noise.

4.1.3.1. Input Power Wire Gauge

It is very important to ensure the voltage at the LVPS input terminal is within the product power input specification to achieve reliable performance. A guideline for allowable voltage drop is to size the wire for <10% of the nominal voltage under maximum load conditions.

A standard wire gauge voltage drop at maximum ambient temperature, nominal input voltage, and maximum rated load condition is provided in Table 4-6 to assist in cable selection.

Table 4-6. Voltage Drop Using American Wire Gauge (AWG)

Wire Gauge (AWG)	Voltage Drop per Meter Round-Trip (V)	Voltage Drop Per Foot Round-Trip (V)
8	0.083	0.025
10	0.133	0.040
12	0.210	0.064

Example: A 10 AWG wire will drop 0.040 V/ft at maximum ambient temperature, nominal input voltage, and maximum rated load. Using 100 feet between the control and the LVPS module would provide a voltage drop of 100 x 0.040 = 4.0 V.

Wire Area Voltage Drop

A standard wire area voltage drop at maximum ambient temperature, nominal input voltage, and maximum rated load condition is provided in Table 4-7 to assist in cable selection.

Released

Table 4-7. Voltage Drop Using Wire Area (mm2)

Wire Gauge (mm^2)	Voltage Drop per Meter Round-Trip (V)	Voltage Drop Per Foot Round-Trip (V)
10	0.069	0.021
6	0.116	0.035
4	0.173	0.053

Example: A 6 mm2 wire will drop 0.116 V/m at maximum ambient temperature, nominal input voltage, and maximum rated load. Using 30 m between the supply and the LVPS module would provide a voltage drop of 30 x 0.116 = 3.48 V. It is very important to ensure the voltage at module input terminal is within the product power input specification to achieve the maximum performance.

IMPORTANT

Note that the control's power supplies are not equipped with input power switches. Some means of disconnecting input power to each supply module must be provided for installation, servicing, and wiring.

A circuit breaker meeting the current handling requirements may be used for this purpose, as well as a separate switch with appropriate ratings.

To avoid nuisance trips, use only time-delay circuit breakers or fuses.

4.1.4. Troubleshooting

System diagnostic routines continuously monitor each LVPS module for proper operation. If a fault condition is detected, the fault is annunciated and the supply's output disabled. If necessary, use the module front panel LEDs to assist in diagnosing any related problems. If all supply LEDs are off (not illuminated), it is probable that input power is not present.

4.1.4.1. LVPS Module LED Descriptions

Power In Status LED—This LED turns RED to indicate that the input voltage is either above or below the specified input range. If this LED is red, check the input voltage. Long-term operation with incorrect input voltages may permanently damage the LVPS module. Once the input voltage is within the supply's input specifications, this LED will become green. Refer to the module input specifications.

Power Out Status LED—This red LED turns on when one of the supply's has shut down, or one or more of the output supply levels is below internally specified levels, or there is a LVPS module overtemperature condition. Note that if the outputs are shorted, the module will be latched OFF and can only be cleared by removing the shorted condition and removing the input power for one minute (or until the front panel LED's go out).

If the LVPS module is not functioning properly, verify the following:

- Verify proper polarity on power connections.
- Verify power source and wire size is sufficient for all loads.
- Verify input power voltage is correct (i.e. low voltage unit is 18 V to 36 VDC).
- Verify PS(+) and PS(–) impedance to EARTH is > 10 MΩ.
- Verify absence of switching noise or transient spikes on input power.
- Verify the module is properly seated in the chassis and the mounting screws are torqued to specification. Each screw should be torqued to 6 Nm (53 lb-in).
- If the Power Out Status LED is red, check for a problem with the LVPS Module output, or with an I/O or CPU module. If the outputs are shorted, the module will be latched OFF and can only be cleared by removing the shorted condition and removing the input power for one minute (or until the front panel LED's go out).
    - If no short circuit is found, reset the supply by removing input power for one minute.

Released

- Verify the power connector is properly seated in the module and the flange screws are torqued to specification.

In the event that one supply needs to be replaced, the recommended method for changing LVPS modules is to turn the power off (to the module being removed and the module being inserted). The system will tolerate this “cold swap” method without failure.

NOTICE

Removing the cover on any module will void the warranty.

Released

Chapter 5.
MicroNet XT CPUs

The MicroNet XT Control supports up to two CPU modules located in the first slot to the right of the power supply (PS1) in the chassis (Slot A1) and an optional second CPU in slot 12 of the 14 slot chassis.

Table 5-1. MicroNet XT Control CPU Module Part Numbers

Description	Part Number
MicroNet XT Control CPU	5466-1300

5.1. Control CPU Module

The MicroNet XT Control CPU module is shown in Figure 5-1. Peripherals include four general use Gbit Ethernet ports, two MicroNet XTN Gbit ports (future), two Remote RTN (Real Time Network) Gbit ports, and two service ports. The Control CPU module can operate in simplex mode or redundant mode. LED descriptions are given in Table 5-3.

For CPU module installation and replacement instructions, see Chapter 10. When power is applied, the CPU module will perform diagnostic tests, before running the application program.



Figure 5-1. MicroNet XT Control CPU

Released

WARNING

Lockout/Tagout LOTO

Ensure that personnel are fully trained on LOTO procedures prior to attempting to replace or service equipment on a "live" running engine. All safety protective systems (overspeed, over temperature, overpressure, etc.) must be in proper operational condition prior to the start or operation of a running engine. Personnel should be equipped with appropriate personal protective equipment to minimize the potential for injury due to release of hot hydraulic fluids, exposure to hot surfaces and/or moving parts, or any moving parts that may be activated and are located in the area of control of the unit.

5.1.1. Specifications

Table 5-2. CPU Module General Specifications

Operating Temperature Range	-40 °C to 70 °C
Processor Cores	Dual Core
Processor Frequency	700 MHz
RAM size	1 GB
Non-volatile Memory	3 GB
Isolation Voltage	500 Vrms to chassis, other I/O
Number of Ethernet Ports	4 – Customer use, 4 – Woodward System Use
Ethernet Baud Rate	Gbit
Front Panel Indicators	Refer to Table 5-3
Service Ports	2, Woodward use only
Module Reset	Reset switch provided

A functional block diagram of the module is shown in Figure 5-2.

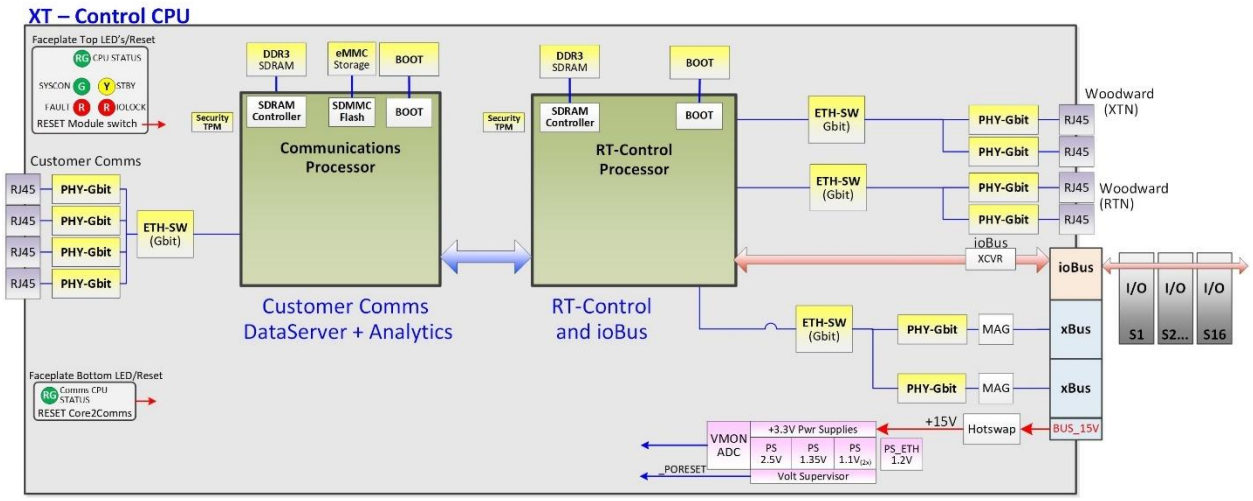

Figure 5-2. MicroNet XT Control CPU Module Block Diagram

Released

5.1.2. Front Panel Indicators

Table 5-3. MicroNet XT Control CPU Module Front Panel LEDs

LED	Name	Description
CPU OK 	CPU Module STATUS, CPU OK LED	GREEN – CPU status OK RED – CPU fault. Actively flashes CPU fault codes when applicable.
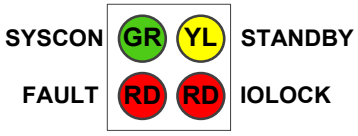	SYSCON	System Controller (GREEN) Active when this CPU module is the System Controller.
	STANDBY	Standby Ready (YELLOW) Active in a redundant system.
	IOLOCK	IOLOCK (RED) - I/O LOCK condition exists either locally on the CPU itself and/or on the bus. **Note:** IOLOCK is driven by the SYSCON. All I/O modules are placed in a failsafe condition, outputs are driven to a known state.
	FAULT	CPU FAULT (RED) – Real-Time Processor fault.
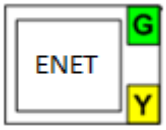	Ethernet	GREEN – Ethernet link established, data is transmitted or received. Blinking YELLOW – Ethernet traffic
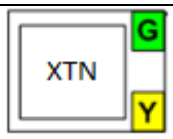	Ethernet	GREEN – Ethernet link established, data is transmitted or received. Blinking YELLOW – Ethernet traffic.
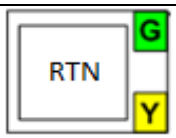	Ethernet	GREEN – Ethernet link established, data is transmitted or received. Blinking YELLOW – Ethernet traffic
COMMS 	Comms CPU	GREEN – Communication Processor Status OK RED – Communication Processor Fault Actively flashes CPU fault codes when applicable

5.1.2.1. Power Up LED Sequence

- CPU OK and COMMS green when application is running.
- IOLOCK off when application is running without errors.

5.1.2.2. Reset Switches

The CPU module has two reset switches, one on the bottom of the module to reset only the communications processor and one on the top of the module, which resets both the real time and the communications processors. The switch locations are shown in Figure 5-3. If a GAP application is successfully running at the time of real time processor reset, the same application will auto-start and re-initialize. When the buttons are pushed, the LEDs will immediately turn red, followed by orange after a few seconds. The process is complete and the CPU is operational once the LEDs return to green.

- When the CPU module reset is asserted in a Simplex system, the CPU will reset, causing a prime mover shutdown.
- When the CPU module reset is asserted in a Redundant system, the CPU will reset and force a switchover to the Backup CPU. The Backup CPU will become SYSCON and take over control of the system without shutting down the prime mover.
- When communications reset is asserted, the application will continue to maintain control but Ethernet ports 1 – 4 communications will be shutdown, reinitialized, and restarted.

Released



Figure 5-3. MicroNet XT Control CPU Reset Buttons

NOTICE

Reset Switches

When using the reset switches on the front of the CPU, wait until the CPU OK and/or COMMS LEDs return to the green running state before asserting any additional reset commands. The reset process may take several minutes to complete. Excessive reset commands while the LED is Red or Orange can result in permanent module damage.

NOTICE

RESET MODULE BEFORE REMOVAL

This module should be reset immediately before removing it from the chassis using the CPU reset button. This notifies the module that it will be removed and provides a graceful failover to another healthy Control CPU module if available.

5.1.3. Front Panel Ports

5.1.3.1. Gbit Ethernet Ports

There are four Gbit Ethernet Ports (RJ45) available to the application software, labeled ENET1 through ENET4, as shown in Figure 5-1 and Figure 5-3. These ports are full duplex, auto switching, and do not require the use of an Ethernet shield box.

5.1.3.2. MicroNet RTN Ports

There are two Real Time Network (RTN) Ethernet ports labeled RTN1 and RTN2. These ports are dedicated to data traffic between the main chassis and expansion chassis. Customer communications are not allowed on this network.

Released

IMPORTANT

- **Double shielded, Cat 5e/Cat 6 Ethernet cables (SSTP) are required**
- **Cable length between the Main rack and RTN switch is 3 m (10 ft.) max.**
- **Cable length between the RTN switch and Expansion rack is 30 m (100 ft.) max.**

NOTICE

The RTN network is designed to maintain reliable communication and operation within the MicroNet XT control system. It should be composed exclusively of control CPUs, Remote RTN modules, and network switches. To ensure system integrity and prevent potential operational disruptions, no other devices should be connected to the control network. Connecting unauthorized devices can result in loss of operations or data, jeopardizing the system's stability and reliability.

5.1.3.3. MicroNet XTN Ports

There are two XTN ports reserved for future Woodward system use. These ports are labeled XTN1 and XTN2, and are currently deactivated.

5.1.3.4. Factory Service Ports

Two isolated RS-232 service ports are located on the CPU module, as shown in Figure 5-4. To access the service ports, unscrew the service port door on the bottom side of the CPU module (2.5mm hex screws). When done, torque the service port door screws to 0.6 NM (5 lb-in). The first port (closest to the front of the module) is dedicated to the real time processor and the second port is dedicated to the communications processor. These ports create a command-line interface to the operating system for specific troubleshooting use and cannot be configured for application software use.

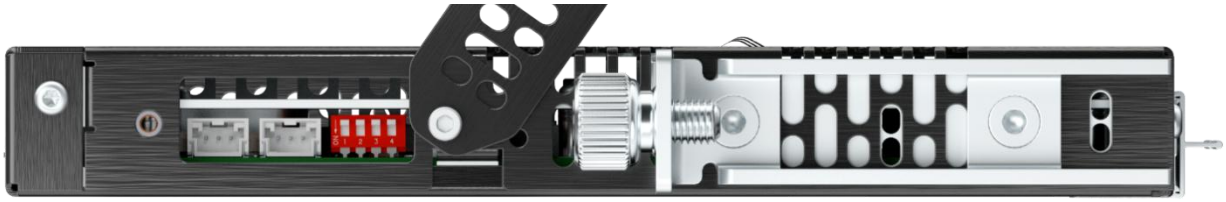

Figure 5-4. MicroNet XT Control CPU Service Port Interface

The communication settings for the factory service ports are fixed at 115200 baud, eight data bits, no parity, one stop-bit, and no flow control. These ports are for operating system use only and cannot be configured for application software use. Refer to Figure 5-5 and Figure 5-6 for connector pinout.

For debug use, a Woodward PN 5417-1344, USB to serial debug cable is required to attach these ports to a PC. These ports are to be used by trained field service personnel only!



Dura-Clik connector (male)
Pin 1 – RS-232 Transmit
Pin 2 – RS-232 Receive
Pin 3 – Signal Ground

Figure 5-5. MicroNet XT Control CPU Module Service Port Connector

Released

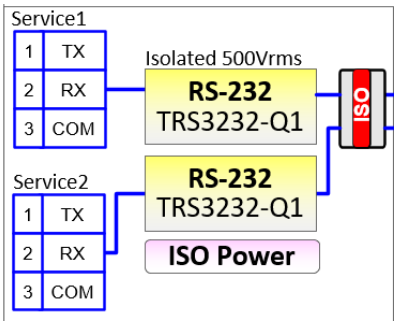

Figure 5-6. MicroNet XT Control CPU Module Service Port Block Diagram

5.1.4. Installation

The modules slide into the control's chassis and plug into the backplane. They are secured with screws at the top and bottom. Each screw should be torqued to 6 Nm (53 lb-in) but can be hand-tightened.

WARNING

RESET MODULE BEFORE REMOVAL

Live insertion and removal of this module is allowed in a MicroNet XT Control chassis. This module should be reset immediately before being removed from the chassis. This notifies the module that it will be removed and provides a graceful failover to another healthy CPU module if available.

NOTICE

Backplane Connector Pins

To prevent damage to the backplane connector pins, the shipping connector cover should not be removed until the module is ready to be inserted into the control's chassis. Care should be given when handling the module without the shipping connector cover to avoid broken or bent pins. Make sure the module is aligned in the chassis module guides before fully seating the module.

5.1.5. Communications (Ethernet)

There are four isolated RJ45 Ethernet ports available to the application software for system use. These ports are full duplex with auto crossover detection. Refer to Table 5-4 for connector information.

Features

- Interface standard: IEEE 802.3 (Ethernet)
- Port Isolation: 1500 Vrms to PS, chassis, and all other circuits
- Control configuration using Woodward AppManager
- Control monitoring, trending, and datalog collection
- Control configuration of Ethernet IP addresses. Refer to software manual (35219V3) for more information.
- General communications such as Modbus master/slave and OPC-UA
- Network time setup and control (NTP)
- Manage configuration data and tunables with Control Assistant or WinPanel

Network Configuration. Ethernet ports (ENET1-4) can be configured for the customer network as desired. See the on-site network administrator to define an appropriate I/P address configuration.

IMPORTANT

ETHERNET CABLES - Max cable length is 100 meters. For robust operation, double shielded (SSTP) Cat5e/Cat6 (or better) Ethernet cables are required (Woodward PN 5417-394, 10 feet).

Released

Table 5-4. MicroNet XT Control CPU Module Ethernet Connector (RJ45) Ports #1-4 (10/100/1000)

Board Connection	Description
	Pin 1 – TD1+ Pin 2 – TD1- Pin 3 – TD2+ Pin 4 – TD3+ Pin 5 – TD3- Pin 6 – TD2- Pin 7 – TD4+ Pin 8 – TD4-

5.1.5.1. Network Configuration Utility (AppManager)

Woodward's ***AppManager*** software can be used to configure network settings and load control software (GAP), and operating system service packs. The *AppManager* utility can be downloaded from www.woodward.com

A PC connection must be made to an Ethernet port (ENET1-4) using a RJ45 Ethernet cable.
For detailed instructions on using AppManager to configure the control ports, refer to the “Network Setup Instructions for the Control” section of the software manual (35219V3)

5.1.5.2. Network Topologies

As a rule, the MicroNet XT CPU should not be directly connected to a workstation with a teamed network setup. A teamed network, directly connected to MicroNet XT CPU, appears to enhance communication instability with some common industrial protocols. The following discusses a simple teamed NIC setup and offers an alternative topology. A teamed network diagram is shown in Figure 5-7.

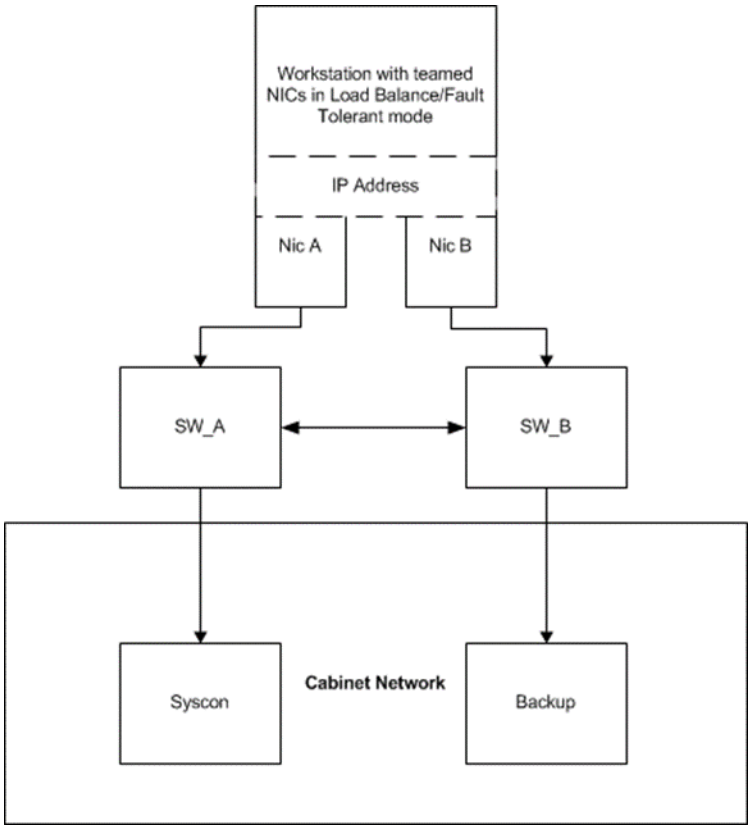

Figure 5-7. Simple Teamed NIC Setup

Released

The teamed workstation has a single IP address. NIC A and NIC B are the teamed adaptors sharing a single IP address. Each NIC has a unique MAC address. There is a connection between the two networks that allows the teaming software to know that the NIC connections are alive and handle the routing.

5.1.5.3. Suggested Topology:

Remove the network team from the computer. A backup IP address could be assigned to the second NIC and configured through the server interfaces (MBE server for Modbus TCP). Removing the team will remove the two MAC addresses associated with a single IP address and force an assigning of an IP address per NIC.

An un-teamed network diagram is shown in Figure 5-8.

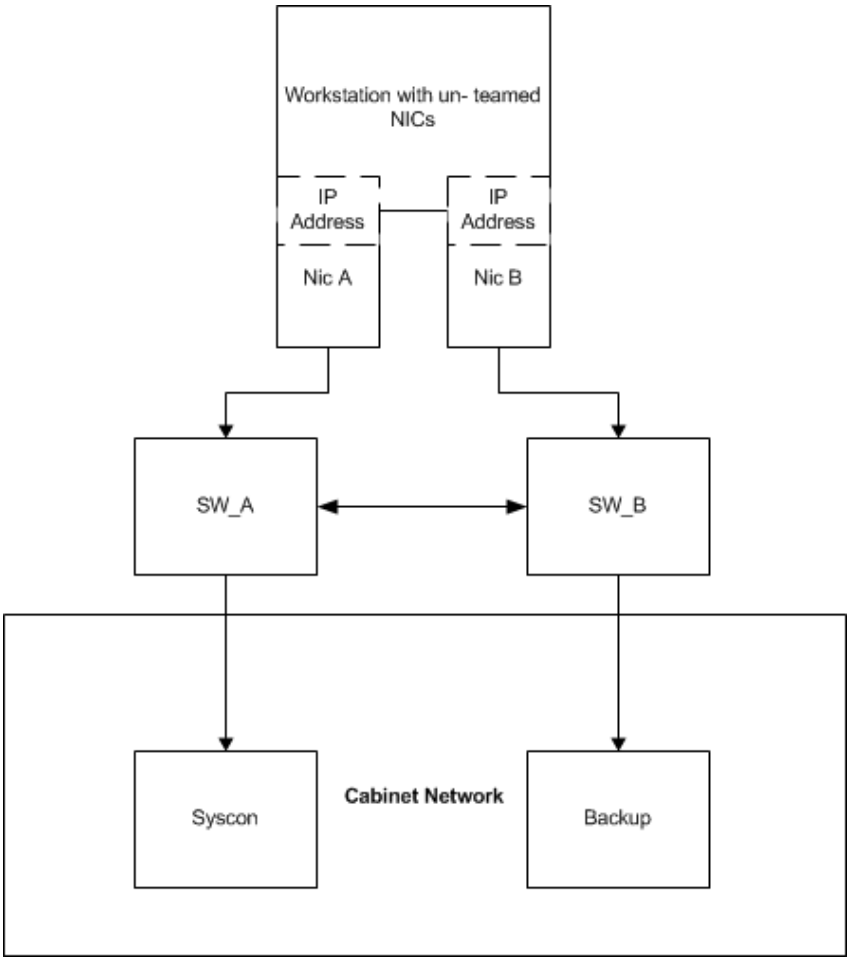

Figure 5-8. Simple Un-teamed NIC Setup

Note: A teamed network can be a part of an industrial control system and play an important part in load balancing and failover as a complete system. However, NO DIRECT CONNECTION to a MicroNet XT CPU by a teamed NIC IP address should be part of the network configuration. The workstation with un-teamed NIC would become the connection to the MicroNet XT CPU for the Modbus data as well as the OPC data. Other computers on the network can access this data through DCOM (in the case of OPC) or additional Modbus server functionality.

A teamed network with no direct connection to the MicroNet XT CPU is shown in Figure 5-9.

Released

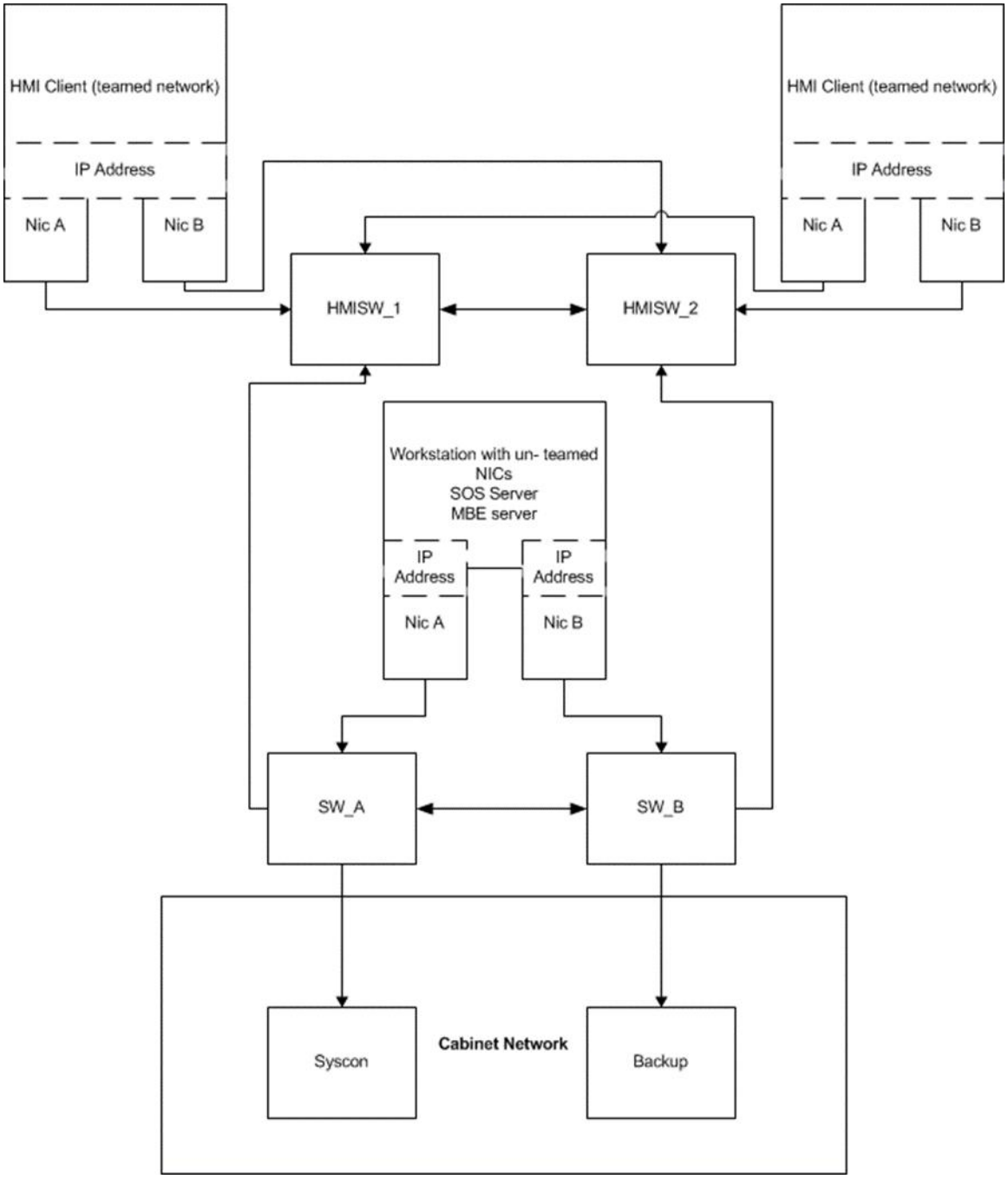

Figure 5-9. Teamed Network with No Direct Connection to MicroNet XT Control CPU

Released

5.1.6. Troubleshooting

5.1.6.1. Flash Code Table

Flash codes are comprised of up to two numbers and are shown in Table 5-5. Each number, if denoted by 0.25 seconds, flashes and pauses with one second pauses between the two numbers and a three second pause before the code repeats. Flash code definitions are module specific.

Table 5-5. MicroNet XT Control CPU Module CPU OK and COMMS LED Flash Codes

Number of LED Flashes	Failure
Operating System	
1, 2	Fallback Boot - Failure
1, 3	Factory Reset Operation Failed
1, 4	Failed to Mount Writable OS Configuration Partition
1, 5	Failed to Mount Logs Partition
1, 6	Fallback Boot - Authentication
1, 7	Syslog Failure
Bootloader	
2, 1	Failed to Authenticate OS Images
2, 2	Bootable OS Image Not Found
2, 3	Fast RAM Test Failed
2, 4	Detailed RAM Test Failed
2, 5	Could Not Load Second Stage Loader
2, 6	Failed to Authenticate Second Stage Loader
2, 10	Could Not Boot OS
Application Initialization	
3, 1	Invalid Slot Detected
3, 2	Invalid CPU Type Detected
3, 3	Invalid Footprint Detected
3, 4	Init_application() was unsuccessful
3, 5	Generic Application Init Failure
Runtime	
4, 1	Rate Group Slip Detected
4, 2	MFT Tick Error
4, 3	Comm CPU disconnect
4, 4	Error writing Trip Logs and AE files to the filesystem
4, 5	Generic Resource Exhaustion detected
4, 6	Generic Runtime Error Detected
4, 7	Local Power Supply Fault Detected

5.1.6.2. CPU Troubleshooting Guide

If all I/O module status LEDs are red or the CPU is in IOLOCK:

- Check error messages in AppManager, for example rate group slip or other initialization errors. Refer to manual 35219V3 for more information.
- Ensure that the CPU module is seated properly in the chassis
- Ensure that the power supply module is operating correctly
- Ensure that the CPU module is in the correct slot
- Ensure that a GAP application has been downloaded correctly, and started. Refer to manual 35219V3 for more information.
- After checking the above, reset the CPU module
- Verify that the SysCon LED is active on the CPU module

Released

A factory reset button is provided at the bottom of the CPU module, shown in Figure 5-10, to reset the module back to the factory defaults. This button should be used with extreme care as it will remove all customer configurable information from the control, including the GAP application, log files, and user accounts and passwords. If any firmware updates were applied to the module, the latest revision of firmware loaded by the customer will be retained after a factory reset. The hole may be covered with tamper tape when security verification is required. Refer to software manual 35219V3 for more information on how to initiate a factory reset.

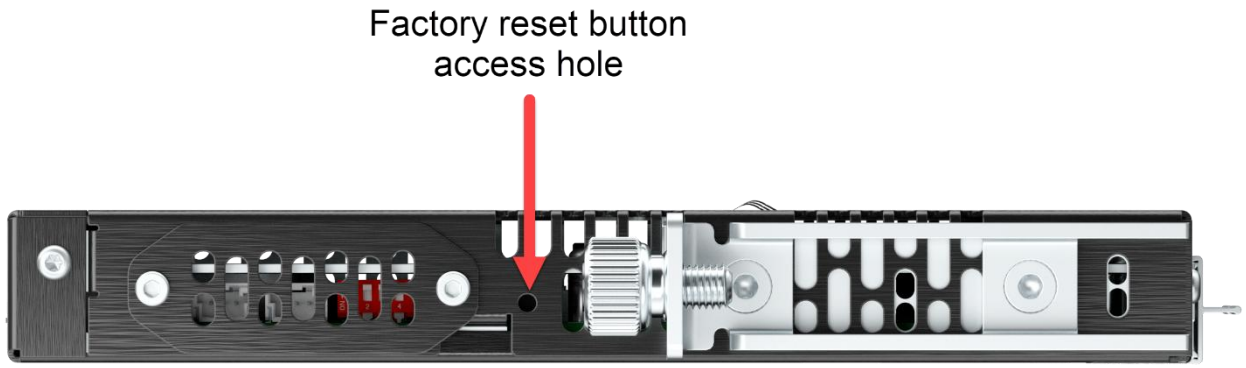

Figure 5-10. Factory Reset Button

5.1.6.3. Ethernet Troubleshooting Guide

- Verify cabling meets CAT-5e or better performance specs.
- Verify cables are shielded properly per Woodward spec (using inner foil and outer braid). Refer to Chapter 10.
- Verify each cable is connected to the desired port and the cable is labeled with correct port number.
- Verify the cable installation has a bend radius > 3 inches to prevent cable stress/breakage.
- Verify that any tie-wraps used for cable installation are not overly tight to prevent cable stress.
- Verify the IP address of each port is set correctly according to your plant network and administrator.
    - The default IP address for all ports is listed in the software manual (35219V3).
- The Woodward AppManager tool can be used to review & change IP address settings.
- Verify that Woodward Tools uses the appropriate Ethernet port (AppManager, OPC Server, & Control Assistant).
- Consider using color coded tie wraps for ports (i.e.: ETH1 = blue, ETH2=red, ETH3=yellow).
- For best performance, verify that Ethernet traffic is < 70% of the network bandwidth and GAP rate group loading is < 80%.

Note that removing the cover on any module will void the warranty.

Released

Chapter 6.
Communication Modules

6.1. Remote RTN Module

Table 6-1. MicroNet XT Remote RTN Module Part Numbers

Description	Part Number
MicroNet XT Remote RTN	5466-1301

The MicroNet Remote RTN - Real Time Network module is located in an expansion rack. The module's primary function is to gather data from local I/O modules and communicate this data to the main rack CPUs while providing redundant failover control of the expansion rack in which it is located.

The Remote RTN module has (2) Real Time Network ports and (1) service port and provides backplane master/slave capability, health monitoring, and failover functions necessary for redundant systems.

Remote RTN modules can support both simplex and redundant systems. Every RTN expansion chassis contains one Remote RTN module located in the first slot (A1) of the MicroNet chassis. A redundant configuration will also have a Remote RTN module located in the CPU2 location (slot A8 or A12 depending on the chassis used).



Figure 6-1. Remote RTN Module

Released

Operation

For redundant systems, up to (2) Remote RTN modules may be installed into each expansion chassis. When initialized by the main chassis CPU, the Remote RTN modules will acquire either a SYSCON or STANDBY status. The Remote RTN module that becomes SYSCON will control the expansion chassis it is located in. It will synchronize with the STANDBY Remote RTN module and perform any redundancy functions as necessary. Input and output data from all I/O modules will be managed appropriately and made available to the GAP Application running in the main-chassis CPUs.

The Remote RTN module communicates with the I/O modules in the expansion chassis and also communicates with the CPU modules in the main chassis. Figure 6-2 is a block diagram of a Remote RTN module. When the power is applied, the Remote RTN module will perform diagnostic tests, before beginning communications.

6.1.1. Specifications

Table 6-2. RTN Module General Specifications

Operating Temperature Range	-40 °C to 70 °C
Processor Cores	Dual Core
Processor Frequency	700 MHz
RAM size	1 GB
Non-volatile Memory	256 MB
Isolation Voltage	500 Vrms to chassis, other I/O
RTN Ports	2 ports, Gbit
Front Panel Indicators	Refer to Table 5-3
Service Ports	1, Woodward use only
Module Reset	Reset switch provided

A functional block diagram of the module is shown in Figure 6-2.

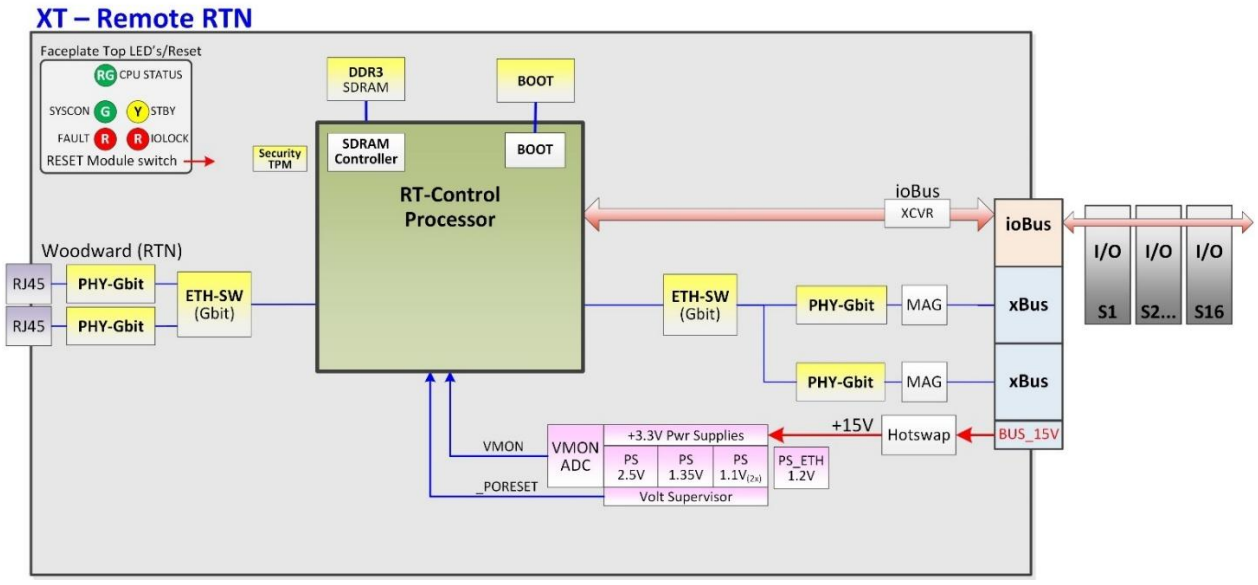

Figure 6-2. Remote RTN Module Block Diagram

Released

6.1.2. Front Panel Indicators

The Real Time Network (RTN) module has the following front-panel LED's.

Table 6-3. MicroNet XT Remote RTN Module Front Panel LEDs

LED	Name	Description
CPU OK 	CPU Module STATUS, CPU OK LED	GREEN – CPU status OK RED – CPU fault. Actively flashes CPU fault codes when applicable.
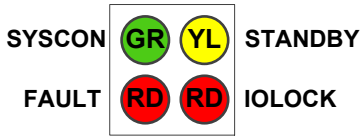	SYSCON	System Controller (GREEN) Active when this RTN module is in SYSCON mode.
	STANDBY	Standby Ready (YELLOW) Active in a redundant system.
	IOLOCK	IOLOCK (RED) - I/O LOCK condition exists either locally on the CPU itself and/or on the bus. **Note:** IOLOCK is driven by the SYSCON. All I/O modules are placed in a failsafe condition, outputs are driven to a known state.
	FAULT	CPU FAULT (RED) – RTN Processor fault.
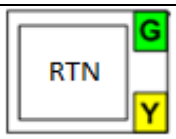	Ethernet	GREEN – Ethernet link established, data is transmitted or received. Blinking YELLOW – Ethernet traffic

6.1.2.1. Power Up LED Sequence

- CPU OK and COMMS green when application is running.
- IOLOCK off when application is running without errors.

6.1.3. Front Panel Reset Switch

The Remote RTN module incorporates a pushbutton reset switch on the front panel to reset the module. When the reset button is pushed, the module is set to IOLOCK. When a redundant RTN module is available and healthy, a failover will occur and the expansion rack modules will continue to run.

When the reset button is pushed, the CPU OK LED will immediately turn red, followed by orange after a few seconds. The process is complete, and the RTN is operational once the LED returns to green.

Reset Notes:

- Resetting a Remote RTN module creates a HealthFault that immediately sets the FAULT light RED.
- Any Expansion chassis running with one healthy RTN. Reset detection will also drive IOLOCK and IORESET to place the expansion rack and all output signals into a known failsafe condition.
- Any Expansion chassis running with two healthy RTNs. Reset detection on the SYSCON (System Controller) causes an immediate "Failover" to the other STANDBY RTN who then becomes the new System Controller for this chassis. Reset detection on the STANDBY unit causes a HealthFault that removes it from STANDBY mode.
- The front-panel RUN/RESET led will be RED while reset is held and will turn GREEN for a few seconds after releasing reset. After turning OFF, it will again turn GREEN when the operating system starts to boot.

NOTICE

Reset Switches

When using the reset switches on the front of the CPU, wait until the CPU OK and/or COMMS LEDs return to the green running state before asserting any additional reset commands. The reset process may take several minutes to complete. Excessive reset commands while the LED is Red or Orange can result in permanent module damage.

Released

NOTICE

RESET MODULE BEFORE REMOVAL

This module should be reset immediately before removing it from the chassis. This notifies the module that it will be removed and provides a graceful failover to another healthy Remote RTN module if available.

6.1.4. RTN Ports

Two Real Time Network ports RTN1 and RTN2 (RJ45) provide redundant communications between the expansion chassis Remote RTN modules and the main-chassis CPU modules. Through these ports, expansion chassis I/O data is made available to the GAP Application running in the main-chassis CPUs.

IMPORTANT

- **Double shielded, Cat5e/Cat6 Ethernet cables (SSTP) are required.**
- **Cable length between Main rack and RTN switch is 3 m (10 ft.) max.**
- **Cable length between RTN switch and Expansion rack is 30 m (100 ft.) max.**

NOTICE

The RTN network is designed to maintain reliable communication and operation within the MicroNet XT control system. It should be composed exclusively of control CPUs, Remote RTN modules, and network switches.
To ensure system integrity and prevent potential operational disruptions, no other devices should be connected to the control network. Connecting unauthorized devices can result in loss of operations or data, jeopardizing the system's stability and reliability.

6.1.5. RTN Configuration

The Module Configuration Dip-Switch (S3) must be configured properly for RTN mode with the expansion chassis address set appropriately for X1 through X7. Note that the current design only allows up to one expansion chassis, X1 is the only valid setting. Future releases will expand the quantity of available expansion chassis.

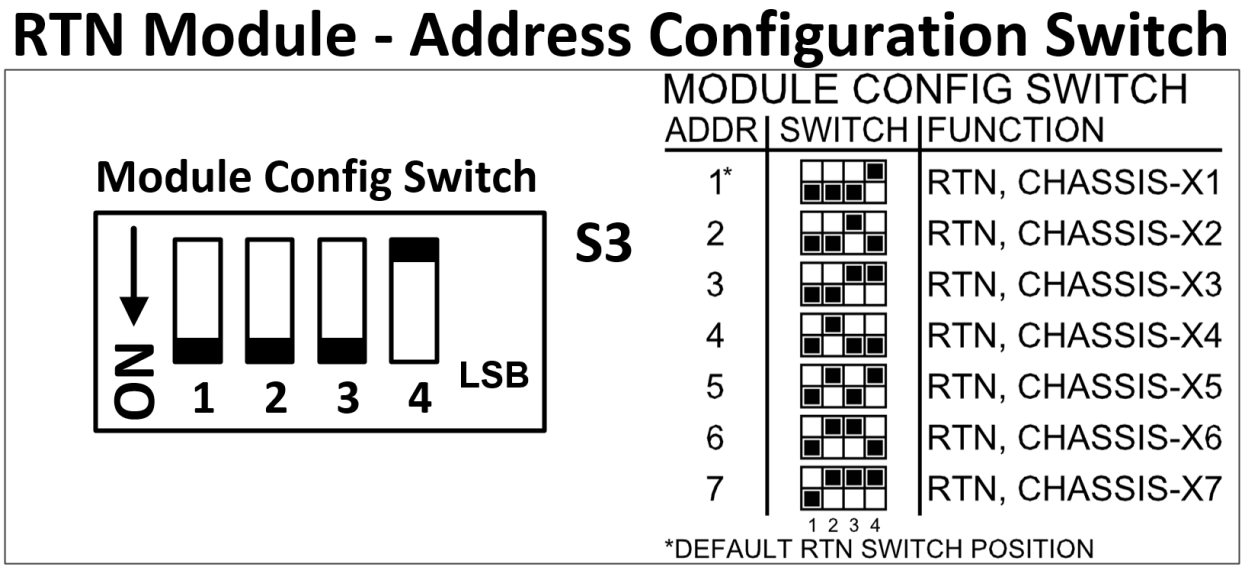

Figure 6-3. Remote RTN Module Hardware Configuration

Released

RTN Mode

The Module Config dip-switch (S3) is factory configured for RTN mode (address #1, expansion rack X1 operation). The RTN module may be re-configured as needed to operate as expansion chassis 2-7. Each expansion chassis must have a unique dip-switch configuration and for chassis with redundant Remote RTN modules, the dip-switch settings must match between the left and right RTN modules.

IMPORTANT **It is recommended to verify proper switch settings before installing the module in the system and when troubleshooting RTN related issues.**

6.1.5.1. Factory Service Port

One isolated RS-232 service port is located on the RTN module, as shown in Figure 6-4. To access the service port, unscrew the service port door on the bottom side of the module (2.5mm hex screws). When done, torque the service port door screws to 0.6 NM (5 lb-in). The first port (closest to the front of the module) is dedicated to the real time processor. These ports create a command-line interface to the operating system for specific troubleshooting use and cannot be configured for application software use.

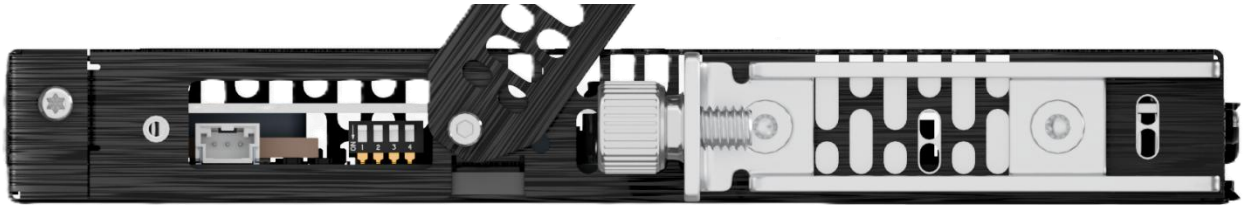

Figure 6-4. MicroNet XT Remote RTN Service Port Interface

The communication settings for the factory service ports are fixed at 115200 baud, eight data bits, no parity, one stop-bit, and no flow control. These ports are for operating system use only and cannot be configured for application software use. Refer to Figure 6-5 and Figure 6-6 for connector pinout.

For debug use, a Woodward PN 5417-1344, USB to serial debug cable is required to attach these ports to a PC. These ports are to be used by trained field service personnel only!



Dura-Clik connector (male)
Pin 1 – RS-232 Transmit
Pin 2 – RS-232 Receive
Pin 3 – Signal Ground

Figure 6-5. MicroNet XT Remote RTN Module, Service Port Connector

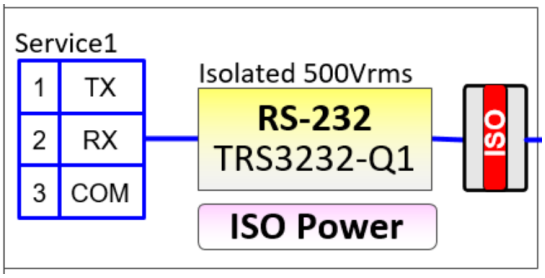

Figure 6-6. MicroNet XT Remote RTN Module, Service Port Block Diagram

Released

6.1.6. Installation

The modules slide into the control's chassis and plug into the backplane. They are secured with screws at the top and bottom. Each screw should be torqued to 6 Nm (53 lb-in) but can be hand-tightened.

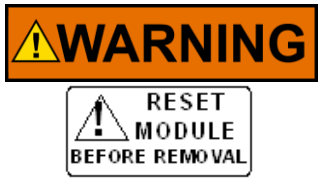

Live insertion and removal of this module is allowed in a MicroNet XT Control chassis. This module should be reset immediately before being removed from the chassis. This notifies the module that it will be removed and provides a graceful failover to another healthy RTN module if available.



Backplane Connector Pins

To prevent damage to the backplane connector pins, the shipping connector cover should not be removed until the module is ready to be inserted into the control's chassis. Care should be given when handling the module without the shipping connector cover to avoid broken or bent pins. Make sure the module is aligned in the chassis module guides before fully seating the module.

6.1.7. Troubleshooting

6.1.7.1. Flash Code Table

Flash codes are comprised of up to two numbers and are shown in Table 6-4. Each number, if denoted by 0.25 seconds, flashes and pauses with one second pauses between the two numbers and a three second pause before the code repeats. Flash code definitions are module specific.

Released

Table 6-4. MicroNet XT - Remote RTN Module LED Flash Codes

Number of LED Flashes	Failure
Fast blink – module is waiting for firmware update	
Operating System	
1, 2	Fallback Boot - Failure
1, 3	Factory Reset Operation Failed
1, 4	Failed to Mount Writable OS Configuration Partition
1, 5	Failed to Mount Logs Partition
1, 6	Fallback Boot - Authentication
1, 7	Syslog Failure
Bootloader	
2, 1	Failed to Authenticate OS Images
2, 2	Bootable OS Image Not Found
2, 3	Fast RAM Test Failed
2, 4	Detailed RAM Test Failed
2, 5	Could Not Load Second Stage Loader
2, 6	Failed to Authenticate Second Stage Loader
2, 10	Could Not Boot OS
Runtime	
5, 2	Tick Slip Fault
5, 3	MFT Timing Fault
5, 4	Rate Group Key Fault
5, 5	IPD MFT Fault
5, 6	OPD MFT Fault
5, 8	Watchdog Fault
5, 9	RTN Ethernet Link Down
5, 10	RTN Ethernet No Data
Module	
6, 1	Parameter Fault
6, 2	Parameter version Fault
6, 4	Non-volatile Memory (read /write) Fault
6, 6	Digital Core Power Supply Fault
6, 8	Software Initialization Fault
6, 9	GAP Application Requested Fault
6, 10	CPU Fault
6, 15	Invalid Chassis Address

6.1.8. Ethernet Switch Hardware

For redundant systems, copper or fiber optic Ethernet switches are required to achieve communication and hardware redundancy. Specific Ethernet switches have been tested and approved to obtain expansion chassis real time performance and redundancy.

Due to the critical nature of communications with an RTN expansion rack, it is required to use Woodward approved copper and fiber Ethernet switches for robust system operation. At the time of this writing, the following hardware part numbers are approved.

Notes:
The Real Time Network (RTN) is a dedicated Woodward I/O expansion network-- no external Ethernet devices are allowed. Each RTN Switch on the dedicated RTN network must be the same Make and Series. No mixing and matching the switches on the RTN network is allowed.

- 1711-1415, Phoenix copper Ethernet switch (FL SWITCH 1108NT, 8TX)
- 1711-1423, Phoenix copper Ethernet switch (FL SWITCH 1105NT, 5TX)

Released

6.1.9. Expansion Racks Using Copper or Fiber Cables

MicroNet XT multi-rack systems are supported by locating expansion racks locally with the main chassis or in different remote locations using fiber optic cables and Ethernet switches. A maximum of 1 MicroNet XT expansion racks are supported in up to 1 different remote locations using fiber optic Ethernet switches. It is required to use Woodward approved hardware for robust operation.

Configuration Notes:

- A combination of approved copper and fiber optic Ethernet switches are allowed.
- A maximum of 4 switches and 1 fiber cable delay shall be allowed in any communication path.
- RTN cables from the main CPU rack to the local RTN switch hardware must be 3 m (10 ft. max).

- **Copper Expansion:** Using copper Ethernet cables and switches, each expansion rack may be located up to 100 meters away from the main CPU chassis.

- **Fiber Optic Expansion:** Using fiber optic cables and switches, each expansion rack may be located up to 2 km away from the main CPU chassis. (FUTURE Feature)

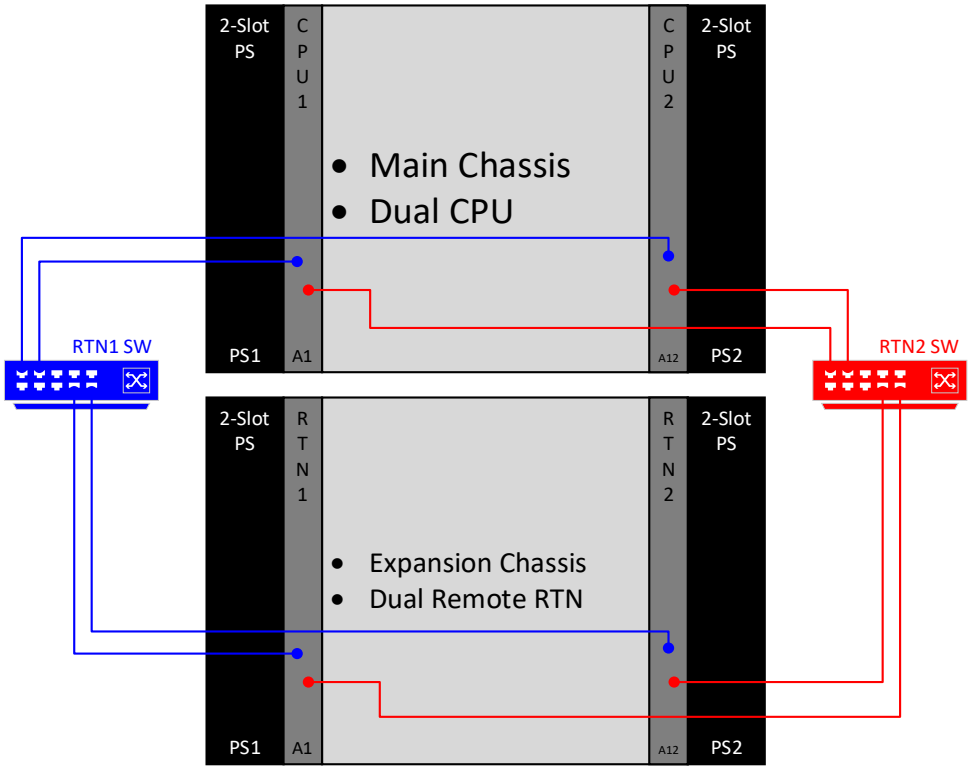

Figure 6-7. MicroNet XT Redundant System

Released

Chapter 7.
Discrete I/O Modules

The MicroNet XT Control supports discrete input/output modules, sometimes called “digital I/O modules”. These modules can read discrete inputs, such as level switches, toggle switches, and relay contacts, and they can drive discrete outputs for field devices such as relays.

Table 7-1. MicroNet XT Discrete I/O Module Part Numbers

Description	Part Number
MicroNet XT DIO 32/16	5466-1304

Table 7-2. Relay Box Kit Part Numbers (Optional)

Description	Part Number
Relay box kit – 8 Channel, 10 Amp, with cable	8923-3065
Relay box kit – 8 Channel, 6 Amp, with cable	8923-3066

Table 7-3. MicroNet XT I/O Module Connector Kits (Optional)

Description	Part Number
MicroNet XT I/O Module Connector Kit	8923-3201

7.1. MicroNet XT Discrete I/O 32/16

The DIO module is a discrete input/output module that supports 24 V discrete inputs and discrete output relay drivers. The DIO 32/16 module contains circuitry for 32 discrete inputs and 16 discrete inputs/outputs. Each of the 16 discrete input/output channels can be configured individually in software as either a discrete input or as a discrete output.

Firmware upgrade can be performed using Service Pack installation via AppManager.

These modules require no calibration. A module may be replaced with another module of the same part number without any adjustment.

Released



Figure 7-1. MicroNet XT DIO 32/16 Module

7.1.1. Discrete Input Specifications

Table 7-4. Discrete Input Specifications

Number of Channels	32
Operating Temperature Range	-40 °C to 70 °C
DI Channel Input Voltage	0 - 32 VDC
DI Channel Input Current	3 to 7 mA at 24 VDC, typical 4 mA
DI Input Voltage Thresholds	< 8 VDC at 1.5 mA = “OFF” (“FALSE”) > 16 VDC at 3 mA = “ON” (“TRUE”)
DI Channel Hardware Filter	1.5 ms nominal, single pole, @25c
DI Channel Isolation	0 V channel to channel 500 VAC to chassis, input power, other modules
DI Channel Debounce Filter	noise filter of 750 µS, typical
Contact Power Output (CPWR)	24 V ±15 % over the operating temperature range,
Contact Power Current	0 to 360 mA, short circuit & reverse polarity protected
External Contact Power	18 – 32 VDC, customer supplied
Time Stamping	1 ms resolution
Maximum Cable Length	300 meters
Miswire Protection (DI)	Short-circuit to chassis / each other
Miswire Protection (CPWR)	Reverse polarity, short-circuit to chassis / each other
Over-voltage Protection	Protected from overvoltage to 32 VDC
Miswiring Protection	Reverse polarity, short-circuit to input or contact power

7.1.2. Discrete Output Specifications

Table 7-5. Discrete Output Specifications

Number of Channels	16, low-side drivers for 12[1,2] or 24 VDC relay coils
Operating Temperature Range	-40 °C to 70 °C
Relay Power Output (RPWR) - Voltage	24 VDC +/- 15%, module supplied (over full operating temperature range)

Released

Relay Power Output (RPWR) - Current	360 mA, short circuit and reverse polarity protected module supplied.
External Relay Power	0-32 VDC, customer supplied
DOUT Load Current	250 mA max per channel
DOUT Readback	High/low coil voltage status
DOUT Leakage (Off)	< 10 µA (over full operating temperature range)
DOUT Channel Isolation	0 V channel to channel, except as provided by external relay 500 VAC to chassis, input power, other modules
Maximum Cable Length	300 meters
IOLOCK State	DOUT circuits are de-energized during power-up, power-down, IOLOCK, internal voltage failures, and watchdog failures
RDBK Filter (HW)	~1.2 ms, nominal, single pole
Miswire Protection	Reverse polarity, short-circuit to chassis / each other, contact power short
Over-voltage Protection	Overvoltage to 32 VDC, contact power and DOUT
Over-current Protection	FET over-current protection at 400 mA, preliminary
Over-temperature	FET protection and shutdown at Ta = 125 °C

Notes:
1 – External power supply must be used
2 – Below 8 VDC, readback will be incorrect

A functional block diagram of the module is shown in Figure 7-2.

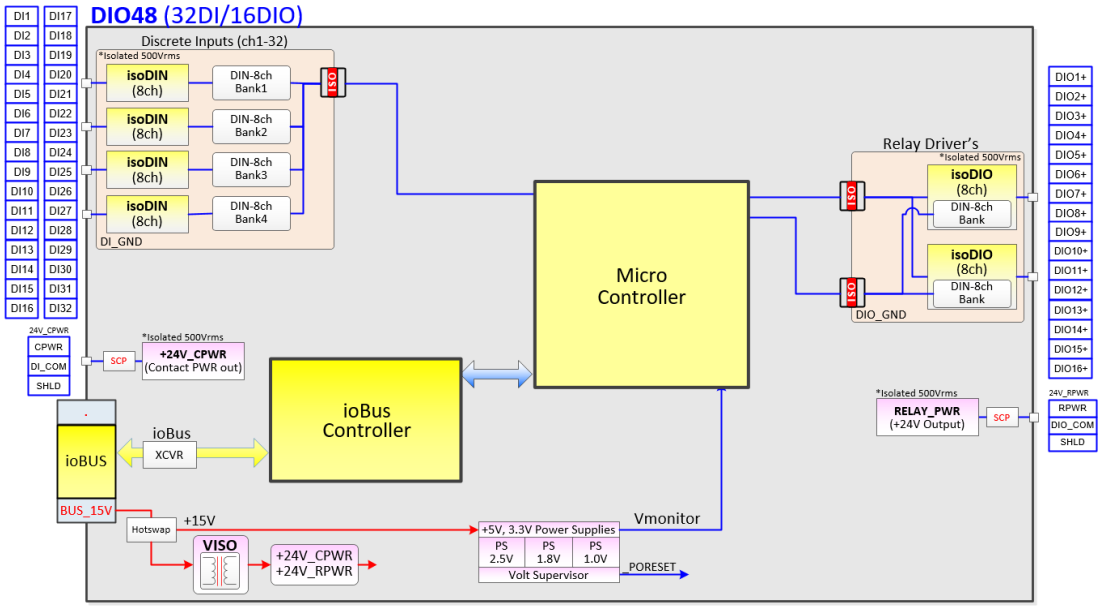

Figure 7-2. DIO Module Block Diagram

7.1.3. Installation

WARNING

If using an external power source with this module, the power source must meet 61010-1 isolation specifications or equivalent. Supplies that meet NEC 725.41 (B) for North America or the Low Voltage Directive for the EU will meet this requirement.

The DIO 32/16 module slides into the control's chassis and plugs into the backplane. It is secured with screws at the top and bottom. Each mounting screw should be torqued to 6 Nm (53 lb-in) but can also be hand-tightened.

Released

NOTICE

Backplane Connector Pins

To prevent damage to the backplane connector pins, the shipping connector cover should not be removed until the module is ready to be inserted into the control's chassis. Care should be given when handling the module without the shipping connector cover to avoid broken or bent pins. Make sure the module is aligned in the chassis module guides before fully seating the module.

All of the discrete inputs and outputs on the module are accessible from the connectors on the front of the module or on the FTMs, and the channels are labeled to correspond to their designation in the application software (discrete input one on the module connector is input one in the application software). The connectors have the ability to be keyed by the end user if required.

7.1.3.1. Discrete Inputs

Each MicroNet XT DIO 32/16 module accepts 32 contact inputs. The DIO 32/16 module is capable of supplying the contact wetting voltage. Optionally, an external 18–32 VDC power source may be used. If an external power source is used for contact wetting, the external source common must be connected to the module's discrete input common (DI_COM), terminal 35 or 71. Figure 7-18 and Figure 7-19 illustrate different discrete input wiring configurations based on the input voltage.

7.1.3.2. Configuration Notes:

- Each MicroNet XT DIO 32/16 module can only accept one input voltage range, 24 VDC (LVD and UL).
- All contact inputs accept dry contacts.
- Discrete inputs are not individually isolated, they are isolated as a group from the discrete outputs and from the rest of the MicroNet XT Control.
- If an external 24 VDC source is used, the common for the external 24 VDC must be tied to the discrete input common (DI_COM), see Figure 7-19. Power for contacts must be supplied by the module's power supply or the external power supply's output must be rated to Class II at 30 VDC or less and outputs must be fused with appropriately sized fuses.
- The built-in contact power output (CPWR) power supply is dedicated for use with DI channels only. The power supplies are isolated from each other, so the CPWR power supply cannot power the DIO channels (DIO-1 through DIO-16) and the RPWR power supply can't power the DI channels (DI-1 through DI-32).

7.1.3.3. Discrete Outputs

The discrete outputs on the MicroNet XT DIO 32/16 module are non-isolated; the isolation takes place in the relays. Figure 7-20 and Figure 7-21 illustrate examples of discrete output wiring configurations.

7.1.3.3.1. 6.1.3.2.1 Configuration Notes

- Each set of relay contacts must meet the power requirements for which it is being used.
- Flyback protection diodes must be used in parallel with relay coils.
- Interposing relays are required when the interfaced circuit demands relay contacts with a higher power rating. If interposing relays or other inductive loads are required, it is recommended that interposing relays with surge (inductive kickback) protection be used.

7.1.4. Module Wiring

I/O Module Signal, Power, and Common Wire Cabling
New installations require coil and wetting voltage power and common wires to be routed with signal wires and shielding of DI/DO, power, and return wires as bundles, as are applicable.

This is required due to the possibility of large transient currents flowing in Protective Earth (PE) ground, transients from load dump of high-current inductive loads like electric motors and indirect lightning strikes. If signal and power wires are routed separately from commons (or power) and the grouping of wires is not shielded, large transients will be coupled into the input or output wiring and may cause state changes to

Released

the signals for a short time: Some of the transient energy will appear as differential voltage at the Discrete Input monitoring or the Discrete Output drive signal load.

A secondary shield, or armor, is suggested for cabling outside of the cabinet/enclosure. In some Marine applications, a secondary shield is required for cabling outside of the cabinet. Secondary shielding must be electrically continuous and may be metal conduit, metal cable armor, or completely enclosed metal cable ways, as well as shielded bundles of shielded wire groups (double shielded cables).

The shielding options items listed must be grounded to the cabinet housing where the MicroNet XT system is installed and are electrically continuous between the field device and the cabinet. *(Except in installations where cable shielding crosses an Intrinsically Safe boundary of a Hazardous Atmosphere.)*

Unshielded discrete I/O wire groups or cables may only be used inside the cabinet, or for cabling that is restricted to very short distances, ≤30m cables, when there is a secondary shield, and in retrofit installations.

NOTICE

Exercise care in retrofit installations. Woodward recommends at least a secondary shield to be present, if the IO wires aren't shielded as signals.

I/O Module Connectors for Direct Wiring

The DIO 32/16 module has two connection points for signal wiring, labeled J1 (top) and J2 (bottom). Each connection point will accept either a terminal block plug for directly wiring to the module or an FTM cable connector end for wiring remotely using an FTM. For the direct wiring option, the connector plugs for J1 are labeled with terminal numbers 1-36, J2 connector plugs are labeled with terminal numbers 37- 72. J1 and J2 connectors may be keyed differently, so that they will only fit in the correct position on the module. When attaching the connectors or FTM cables to the I/O module, securely tighten the flange screws on both sides to prevent the connectors from accidentally coming loose. Figure 7-3 shows a DIO 32/16 module field wiring connector.



Figure 7-3. DIO 32/16 Module Connector

Each connector plug is equipped with an integrated strain relief tab. The strain relief tab can be removed if desired by sliding it down the center line of the connector. Wiring can be secured to the strain relief tab by running zip ties through the provided holes in the tab.

When prepping wire for the connectors, strip the insulation back 0.24-0.28 in (6-7 mm) from the end. The connector will accept the wire sizes outlined in Table 7-6. Note that field wiring should be selected by the customer based on local electrical code regulations.

Released

Table 7-6. I/O Module Connector Wire Gauges

Wire Type	AWG		mm^2	
	Min	Max	Min	Max
Stranded Wire	22	16	0.34	1.5
Solid Conductor	22	16	0.34	1.5
Ferruled Stranded Wire	24	18	0.14	1

Each I/O module ships with a special nylon tool to assist with wiring the connectors, see Figure 7-4. The connectors have spring loaded terminals. To insert a wire into the connector, slide the long end of the tool along the exposed spring on the side of the connector, pressing down firmly. When the tool is fully inserted into the connector, the tool will lock into place and lock the terminal open; see Figure 7-5. Caution: do not try to actuate the terminal spring by prying the tool against the connector, this may lead to damaging the connector or the tool. With the tool fully inserted, the terminal will be opened allowing the wire to be inserted into the hole. To secure the wire, remove the tool from the connector. Be careful to not let the spring terminal close on the wire insulation. If needed, a screwdriver with a maximum 2.5 x 0.4mm blade may be used in place of the supplied tool.



Figure 7-4. Special Nylon Wiring Tool



Figure 7-5. Connector Tool Operation

To troubleshoot or check terminated wiring, the exposed metal springs can be used as probing test points.

Additionally, each I/O module also ships with coding elements. Coding is optional and allows the customer to key each connector uniquely so that they cannot be plugged into the wrong module position, both between J1 and J2 and across modules. There are two steps to keying a connector. The first step is to select one or more locating tabs on the bottom of the terminal on the connector plug and snip it off as shown in Figure 7-6. Then insert the coding elements into the matching terminal slots of the mating connector on the module and break them off the holding tool as shown in Figure 7-7. It is suggested to have a unique keying combination for each connector in the system.

Released

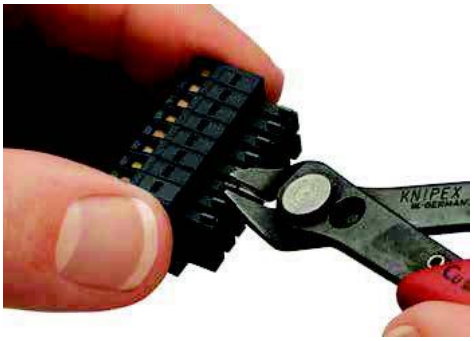

Figure 7-6. Removing Connector Plug Keying Tab

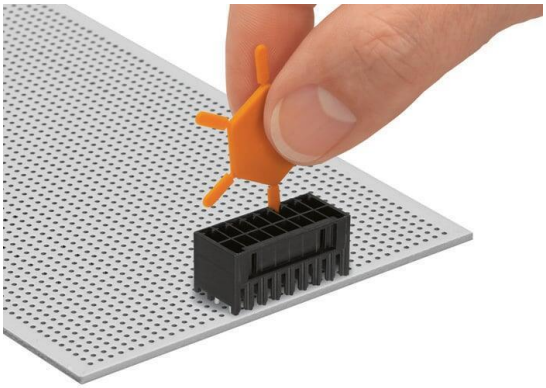

Figure 7-7. Inserting the Keying Element into the Module Connector

The MicroNet XT DIO 32/16 module connector pinouts are shown in Figure 7-8.

J1

RPWR_24V	2	1	DIO_COM
DIO - 2	4	3	DIO - 1
DIO - 4	6	5	DIO - 3
DIO - 6	8	7	DIO - 5
DIO - 8	10	9	DIO - 7
CPWR_24V	12	11	CPWR_24V
DI - 2	14	13	DI - 1
DI - 4	16	15	DI - 3
CPWR_24V	18	17	CPWR_24V
DI - 6	20	19	DI - 5
DI - 8	22	21	DI - 7
CPWR_24V	24	23	CPWR_24V
DI - 10	26	25	DI - 9
DI - 12	28	27	DI - 11
CPWR_24V	30	29	CPWR_24V
DI - 14	32	31	DI - 13
DI - 16	34	33	DI - 15
SHLD	36	35	DI_COM

J2

RPWR_24V	38	37	DIO_COM
DIO - 10	40	39	DIO - 9
DIO - 12	42	41	DIO - 11
DIO - 14	44	43	DIO - 13
DIO - 16	46	45	DIO - 15
CPWR_24V	48	47	CPWR_24V
DI - 18	50	49	DI - 17
DI - 20	52	51	DI - 19
CPWR_24V	54	53	CPWR_24V
DI - 22	56	55	DI - 21
DI - 24	58	57	DI - 23
CPWR_24V	60	59	CPWR_24V
DI - 26	62	61	DI - 25
DI - 28	64	63	DI - 27
CPWR_24V	66	65	CPWR_24V
DI - 30	68	67	DI - 29
DI - 32	70	69	DI - 31
SHLD	72	71	DI_COM

Figure 7-8. DIO 32/16 Module Connector Pinout

Released

7.1.4.1. FTM Modules for Remote Wiring

The Discrete FTM offers an alternative to the standard front module connector plugs when remote wiring is required. This provides flexibility in system installation and configuration. Importantly, the same I/O module part number can be utilized for both direct wiring and FTM wiring options, allowing for seamless integration and easy adaptation to various wiring preferences.

A mixed wiring approach is supported, meaning that direct wiring and FTMs can be used together within the same system. Each connector found on the I/O module is designed to accommodate an FTM, with one FTM assigned per module connector.

To further enhance installation reliability, FTMs support connector coding. This feature is optional but recommended, as it prevents the accidental crossing of cables between the I/O module connectors or FTMs. For guidance on applying connector and cable coding inserts, refer to the direct wiring section, which provides detailed instructions for proper coding procedures.

There are two available configurations of FTMs, depending on installation preference: screw down or spring type terminal blocks.

There are two available configurations to accommodate different installation preferences. Users can choose between screw terminal blocks and spring terminal blocks. This flexibility allows for easier adaptation to various wiring practices and installation environments.

Table 7-7. MicroNet XT Discrete I/O FTM Part Numbers

Description	Part Number
MicroNet XT DIO FTM – Screw Terminals	5466-5008
MicroNet XT DIO FTM – Spring Terminals	5466-5009

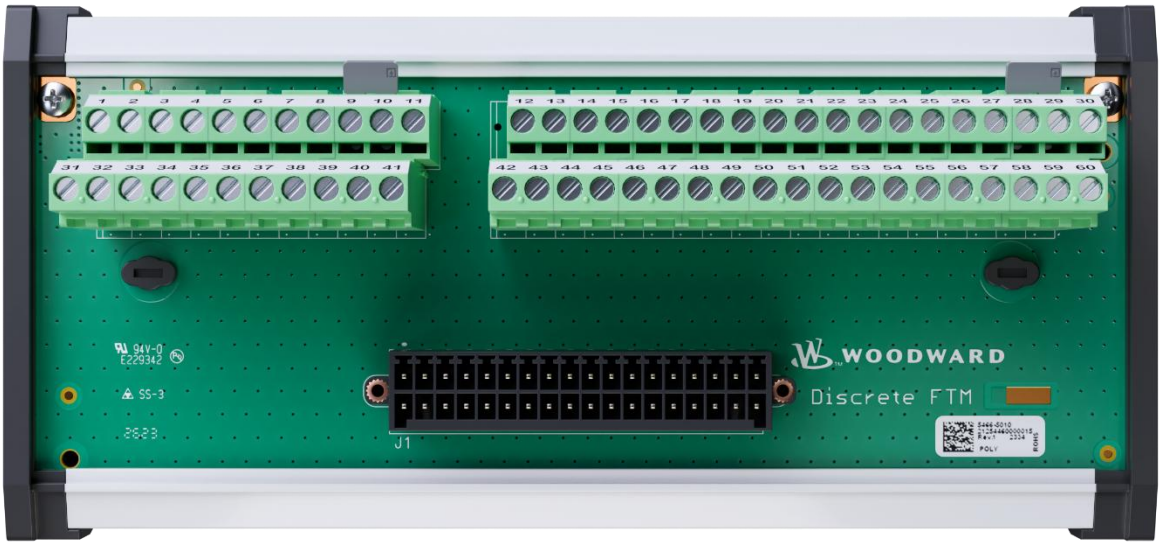

Figure 7-9. Discrete FTM with Screw Type Terminals

Released

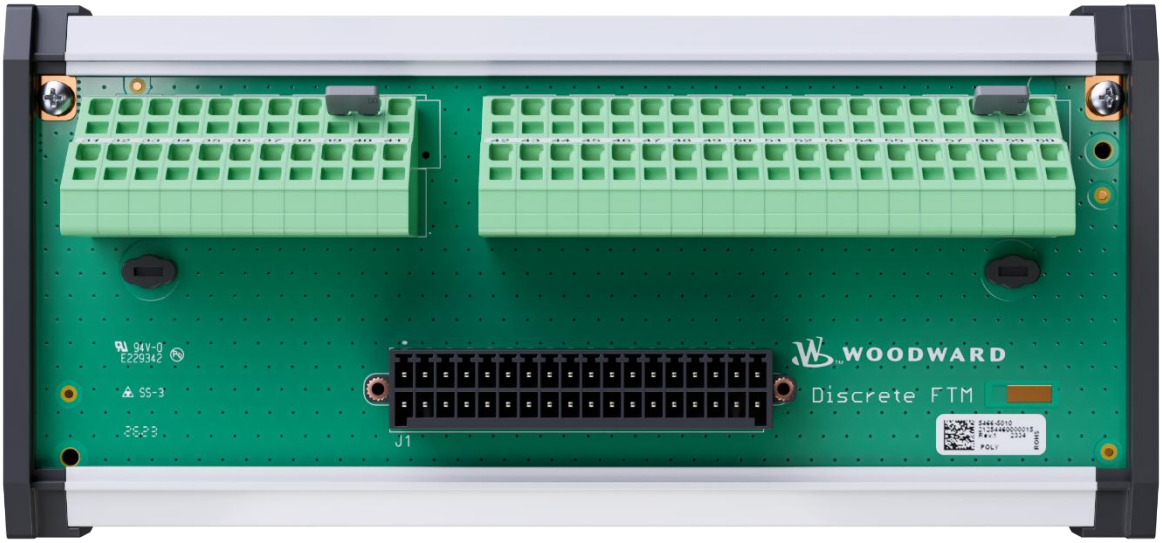

Figure 7-10. Discrete FTM with Spring Type Terminals

Each FTM is connected to its corresponding I/O module by means of an FTM cable. To accommodate different installation requirements, the FTM cable is available in multiple lengths. This flexibility allows for optimal positioning of the FTMs within the control cabinet, making installation and maintenance easier regardless of cabinet size or layout.

Table 7-8. MicroNet XT Discrete I/O FTM Cable Part Numbers

Length	Part Number
6ft (1.8m)	5417-3106.6
8ft (2.4m)	5417-3106.8
10ft (3m)	5417-3106.10
12ft (3.6m)	5417-3106.12
14ft (4.3m)	5417-3106.14
16ft (4.9m)	5417-3106.16
18ft (5.5m)	5417-3106.18
20ft (6.1m)	5417-3106.20

Released



Figure 7-11. Grey Discrete FTM Cable

To ensure proper connection and reliable operation of the FTMs, it is essential to prepare the field wiring correctly before installation. Begin by stripping the insulation from the end of the wire, removing between 0.24 and 0.28 inches (6 to 7 millimeters) to expose the conductor. This preparation allows the wire to fit securely into the terminal and make good electrical contact.

The FTMs are designed to accommodate the wire sizes specified in Table 7-9. It is the responsibility of the customer to select appropriate field wiring in accordance with local electrical code regulations to ensure compliance and safety during installation and operation.

For FTMs equipped with screw-type terminals, it is important to secure the connection by tightening the screw to a torque value between 4.4 lbf-in and 5.3 lbf-in (0.5 Nm to 0.6 Nm). Applying the correct torque helps maintain a stable and secure electrical connection, reducing the risk of loose wiring or terminal damage.

Table 7-9. FTM Wire Gauges

Wire Types	AWG		mm^2	
	Min	Max	Min	Max
Stranded Wire	24	12	0.2	2.5
Solid Conductor	24	12	0.2	4
Ferruled Stranded Wire	24	14	0.25	2.5

The DIO 32/16 module FTM pinouts for the Discrete Inputs/Outputs are shown in Figure 7-12 and the pinouts for the Discrete Inputs are shown in Figure 7-13.

Released

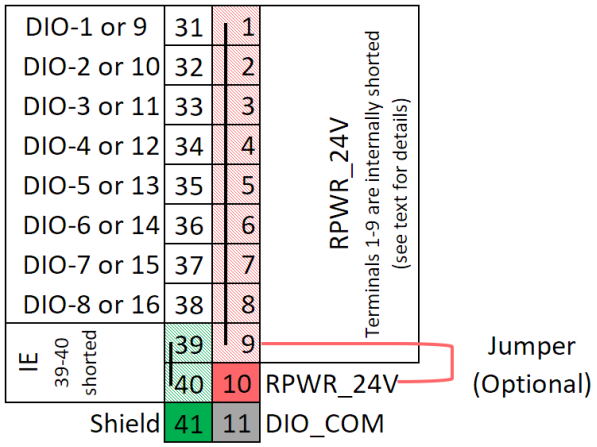

Figure 7-12. FTM Wiring for Discrete Inputs/Outputs

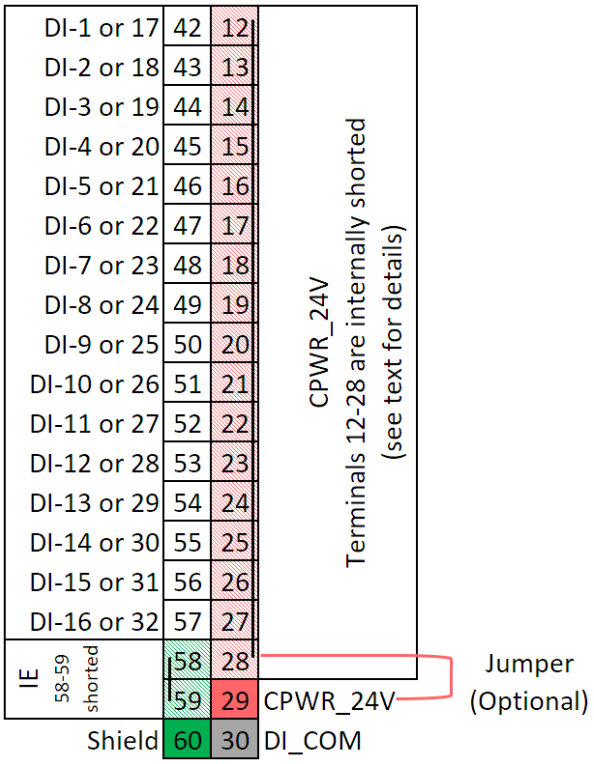

Figure 7-13. FTM Wiring for Discrete Inputs

The FTMs are equipped with power terminal positions for each Discrete Input/Output channel. Specifically, terminals 1 through 9 are electrically connected, forming a bank of power terminals. In their standard configuration, FTMs are shipped from the factory with a jumper installed between terminals 9 and 10. This jumper connects the power bank to the 24V module supply, commonly referred to as RPWR. When the application requires an external power supply, this jumper can be removed, allowing the power bank to be connected to the external supply. The wiring for this configuration is illustrated in Figure 7-14

Likewise, FTMs provide power terminal positions for each Discrete Input channel. Terminals 12 through 28 are grouped together to create a separate bank of power terminals. Factory default configuration includes a jumper between terminals 28 and 29, tying this bank to the 24V contact power (CPWR) supplied by the module. For installations that use an external power supply, the jumper can be removed and the power bank wired to the external supply, as shown in Figure 7-14.

Released

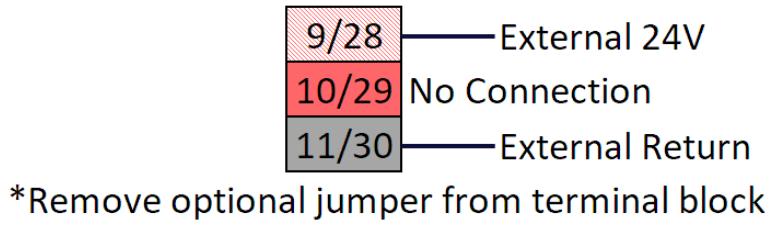

Figure 7-14. FTM Wiring for External Power Supplies

When using shielded cable bundles for signal wiring, the FTM offers two distinct methods for terminating the shield drain wire. These termination practices ensure proper grounding and minimize electrical interference within the system.

7.1.5. Direct Cabinet Ground Connection

The first method involves connecting the shield directly to the cabinet ground. FTMs are grounded to the DIN rail by means of metal DIN rail clips attached to the base. To accomplish grounding of the shield drain wire to the cabinet, the wire should be terminated in either terminal 41 or terminal 60 on the FTM.

7.1.6. Instrument Earth (IE) Ground Connection

In certain installations, a separate isolated ground is required for field wiring. This dedicated ground is commonly known as Instrument Earth (IE). For situations where an isolated IE is necessary, the shield drain wire should be terminated according to the configuration shown in Figure 7-15, ensuring proper isolation and grounding for field wiring.

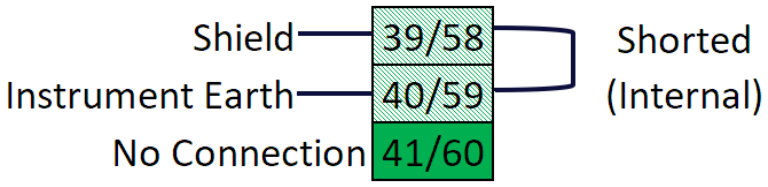

Figure 7-15. FTM Shield Grounding for Customer Supplied Instrument Earth

7.1.6.1. Relay Adaptor Reference

The MicroNet XT DIO 32/16 module connection to a relay adaptor is shown in Figure 7-16.

Released

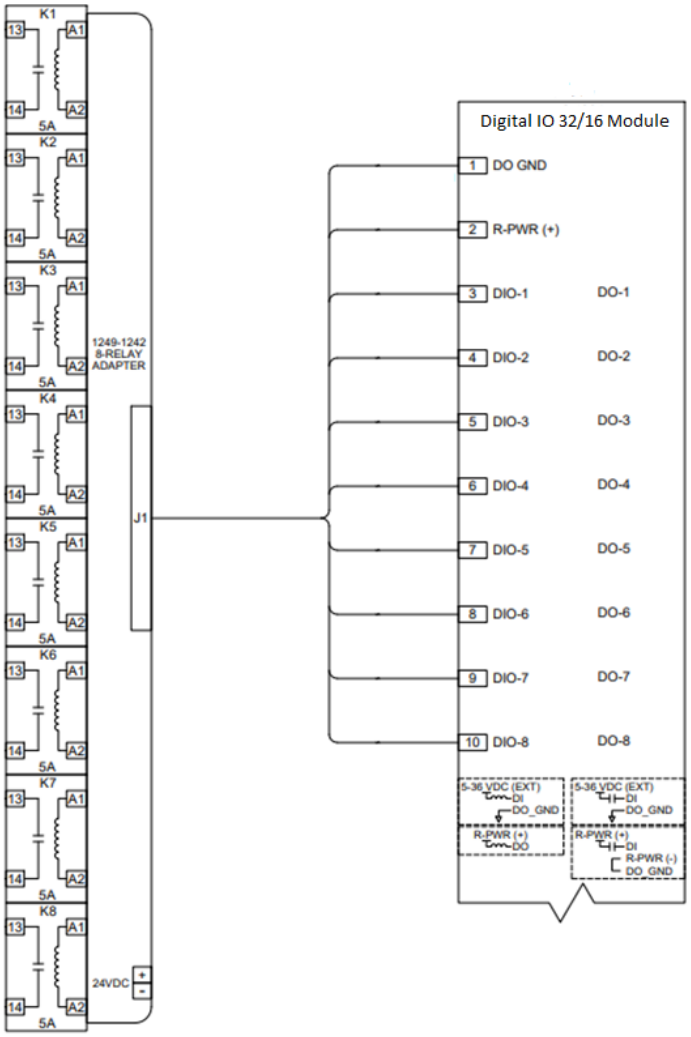

Figure 7-16. DIO 32/16 Module Relay Module Wiring

7.1.7. Field Wiring

7.1.7.1. Discrete Input Field Wiring

Figure 7-17 shows the discrete input wiring for a system using the module internal power supply. Figure 7-18 shows the wiring for a system using an external power supply.

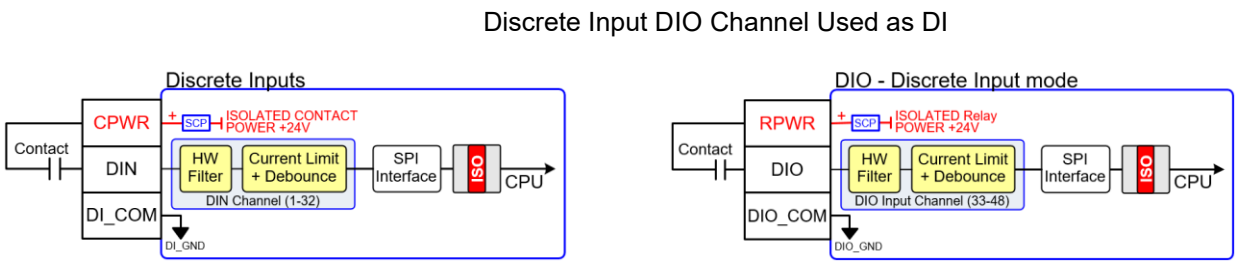

Figure 7-17. DIO 32/16 Module Discrete Input Interface Wiring Using Internal Power Supply

Released

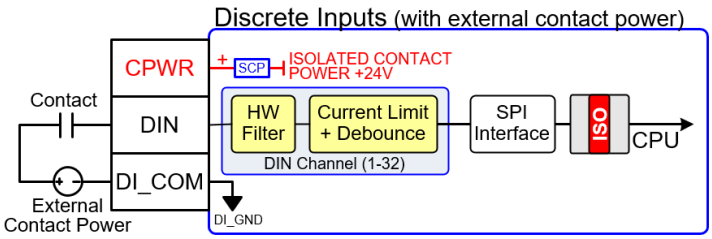

Figure 7-18. DIO 32/16 Module Discrete Input Interface Wiring Using an External Power Supply

7.1.7.2. Discrete Output Field Wiring

Figure 7-19 shows the discrete output wiring for a system using the module internal power supply. Figure 7-20 shows the discrete output wiring for a system using an external power supply.

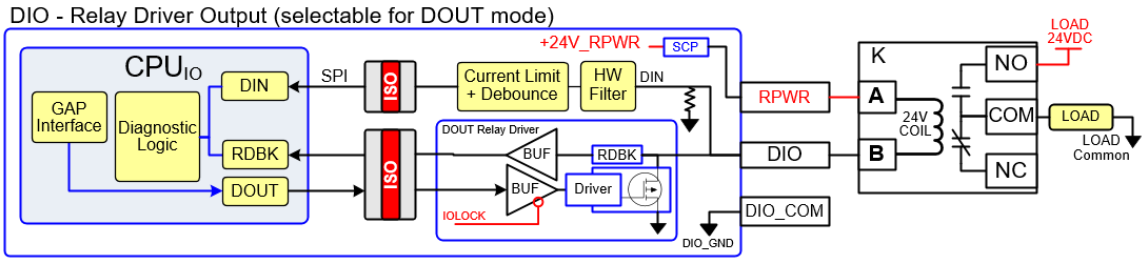

Figure 7-19. DIO 32/16 Module Relay Output Interface Wiring Using Module Power Supply

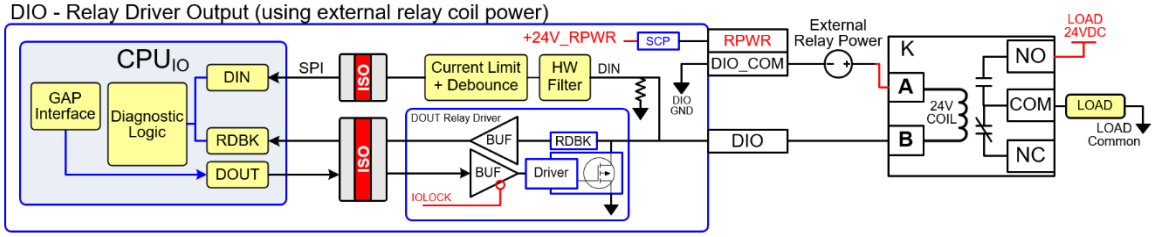

Figure 7-20. DIO 32/16 Module Relay Output Interface Wiring Using External Power Supply

Miswiring the negative of an external power supply to the RPWR terminal may result in damage to the module that can go undetected or result in readback mismatches. Channel overvoltage protection may also be lost. Always perform wiring checkouts before energizing the system.

7.1.8. Relay Box Module—8 Channel

⚠WARNING **This relay module is for use in ordinary or non-hazardous locations only.**

The MicroNet XT DIO 32/16 module supports 6A and 10A relay modules. They can be ordered with a cable (3 m length) that has the relay connector on one end and open (flying) leads on the other end. They must be manually wired to the module terminal block connector or the FTM. The relay modules are shown in Figure 7-21.

Released



Figure 7-21. 8 Channel Relay Modules, 10 A and 6 A, Shown Wired to Module Connector

A schematic of the relays is shown in Figure 7-22.

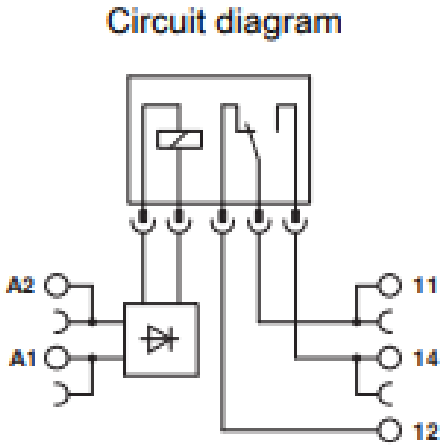

Figure 7-22. Single Relay Wiring Connections

⚠WARNING

Relay contacts for VAC signals (115 VAC, 2 Amps) shall be connected to a control circuit equipped with the transformer or other source of supply providing double or reinforced insulation from the main circuits.

Note: Many power supplies that meet NEC 725.41 (B) for North America or Low Voltage Directive for EU will meet this requirement

8923-3065 – 8 channel, 10 A

Table 7-10. 10 A Relay Specifications

Number of Channels	8
Coil Power	18 mA at 24 VDC, typical. Reverse Polarity protection
Typical Response Time	8 mS
Typical Release Time	10 mS
Yellow LED	Operating voltage
Contact Type	Single (1) changeover contact

Released

Max Contact Switching Voltage	250 V AC/DC
Min Contact Switching Voltage	12 VDC (at 10 mA)
Maximum Inrush Current	30 A (300 mS)
Ambient Temperature Range	-40 C to 70 C
Storage Temperature Range	-40 C to 85 C
Dimensions	14 mm wide by 80 mm high by 94 mm deep

8923-3066 – 8 channel, 6 A

Table 7-11. 6 A Relay Specifications

Number of Channels	8
Coil Power	9 mA at 24 VDC, typical. Reverse polarity protection.
Typical Response Time	5 mS
Typical Release Time	8 mS
Yellow LED	Operating voltage
Contact type	Single (1) changeover contact
Max Contact Switching Voltage	250 V AC/DC
Min Contact Switching Current	10 mA (at 12 VDC)
Min Contact Switching Voltage	5 VDC (at 100 mA)
Maximum Inrush Current	10 A (4 seconds)
Ambient Temperature Range	-40 C to 70 C
Storage Temperature Range	-40 C to 85 C
Dimensions	6.2 mm wide by 80 mm high by 94 mm deep

IMPORTANT

Verify that each set of relay contacts meets the power requirements of the circuit with which it is being used. Interposing relays are required when the interfaced circuit demands relay contacts with a higher power rating. If interposing relays or other inductive loads are required, it is recommended that interposing relays with surge (inductive kickback) protection be used. Improper connection could cause serious equipment damage.

Released

7.1.9. Troubleshooting

Each module contains a status LED that can illuminate GREEN or RED, to annunciate the module health.

A green LED indicates the module is healthy and operational.
A red LED indicates the module is in IOLOCK, initializing, in HALT mode, or has a fault.

During the module's initialization, which occurs after every CPU reset, the CPU turns the status LED to red. The CPU then tests each I/O module. If the diagnostic test is not passed, the status LED remains red and/or blinks. If the test is successful, the status LED turns to green. If the status LED remains red, the module may be located in the wrong slot, be held in IOLOCK or HALT mode by the CPU, or be faulty.

7.1.9.1. Flash Code Table

Flash codes are comprised of up to two numbers and are shown in Table 7-12. Each number is denoted by 0.25 second flashes and pauses, with one second pauses between the two numbers and a three second pause before the code repeats. Flash code definitions are module specific, the flash codes for the DIO 32/16 module are in Table 7-12.

Released

Table 7-12. DIO LED Indications of Failure

	Flash Code	Failure
Main Application	1, 2	Tick Slip Fault
	1, 3	MFT Timing Fault
	1, 4	Rate Group Key Fault
	1, 5	IPD MFT or IPD RG Timing Fault
	1, 6	OPD MFT of OPD RG Timing Fault
	1, 7	Background Slip Fault
	1, 8	Watchdog Fault
	1, 9	GAP Application Requested Fault
	2, 1	Parameter Fault
	2, 2	Parameter Version Fault
	2, 3	SPI Timing Fault
	2, 4	Non-volatile Memory (read/write) Fault
	2, 6	Digital Core Power Supply Fault
	2, 7	Software Fault
	2, 8	Software Initialization Fault
	2, 9	Software Exception
	2, 10	CPU Fault
	2, 11	Invalid Application Part Number
	2, 12	Invalid Application Revision
	2, 13	Invalid FPGA Part Number
	2, 14	Invalid FPGA Revision
	2, 15	HSSL Communication Fault
Bootloader	3, 1	Invalid Application Image
	3, 2	Invalid FPGA Image
	3, 3	Invalid Bootstrap Images
	3, 4	FPGA Startup Failed
	3, 5	Startup Handshake Not Acknowledged.
	4, 1	System Clocks Initialization Error
	4, 2	Internal MCU Flash Memory Error
	4, 3	External SPI Flash Memory Error
	4, 4	MCU Exception Detected
	4, 5	Internal MCU RAM Memory Error
	4, 6	MCU Initialization Error
	4, 7	SMU Initialization Error
	4, 8	SMU Activation Error
	4, 9	Runtime Recovery Failed
	4, 10	NULL-pointer Dereference
	4, 11	Destructive Unlock Failed
	4, 12	Flash Loader Initialization Failed
	4, 13	Invalid Bootloader Part Number
	4, 14	Invalid Hardware ID
	4, 15	Invalid Bootloader Revision
Bootstrap	5, 1	System Clocks Initialization Error
	5, 2	Internal MCU Flash Memory Error
	5, 3	External SPI Flash Memory Error
	5, 4	HSSL Communication Error
	5, 5	MCU Exception Detected
	5, 6	MCU Initialization Error
	5, 7	Module Slot Initialization Failed
	5, 8	Flash Loader Initialization Failed
	5, 9	Invalid Bootstrap Part Number
	5, 10	Invalid Bootstrap Revision
	5, 11	Invalid FPGA Part Number
	5, 12	Invalid FPGA Revision

Detailed fault descriptions for flash codes can be obtained in AppManager.

Released

7.1.9.2. Fault Detection

In addition to detecting MicroNet XT DIO 32/16 Module hardware faults, the application software may detect I/O channel faults.

Discrete Output Faults: The module monitors the I/O control voltage and annunciates faults. The application software determines the course of action in the event of a fault.

Microcontroller Faults: The system monitors a software watchdog, a hardware watchdog, and a software watchdog on the bus communications. All outputs are shut down in the event of a microcontroller fault.

If during normal control operation all the I/O module status LEDs are red, check the CPU module for a failure. When a module fault is detected, its outputs will be disabled or de-energized.

7.1.9.3. Troubleshooting Guide

If during normal control operation, all of the I/O modules status LEDs are red, check the7 CPU module for a failure. Check the CPU module for a fault or an IOLOCK condition. The IOLOCK status could be caused by the application being in configuration mode or the CPU having no application in run mode.

If during normal control operation only the DIO 32/16 module's status LED is red or flashing red, ensure that it is installed in the correct slot. If it is, then replace that module. See instructions for replacement in Chapter 10, Installation (System Level Installation). When a module fault is detected, its outputs will be disabled or de-energized.

7.1.9.3.1. Discrete Inputs

If a discrete input is not functioning properly, verify the following:

- Check the application software configuration to ensure that the input is configured properly.
- Measure the input voltage on the terminal block. It should be in the range of 16–32 VDC.
- Check the wiring. Look for a loose connection on the terminal blocks, disconnected or misconnected cables, or a missing jumper on the terminal block.
- Verify each DI(+) is not shorted to another input.
- Verify each DI(+) is not shorted to CPWR(+), DI_COMM(–), PS(+), PS(–), EARTH.
- Verify each DI(+) wiring is functional by setting each input HIGH (>16 V DC) and then LOW (<8 V DC). Verify that the voltage at the module changes.
- When possible, consider using a shielded DIN cable.
- After verifying all of the above, if FTMs are used, exchange the J1 and J2 cables. If the problem moves to a different channel, replace the cable. If not, replace the module.
- If the readings are incorrect on several channels of the module, corresponding to both connectors or cables, replace the module.
- If replacing the module does not fix the problem and an FTM is used, replace the FTM. The FTM contains only traces and a few discrete components, so failure is extremely unlikely. See instructions for replacing the FTM in Chapter 10.

DI, Contact Power (CPWR)

- Note that using the internal isolated contact power output (CPWR, DI_COM) is highly recommended to maintain discrete input isolation for other plant devices / controls.
- CPWR(+) is an output voltage, it should never be connected to any other supply.
  - Verify CPWR(+) is not connected to DI_COM(–), PS(–), EARTH.
  - Verify DI_COM(–) is not connected to CPWR(+), PS(+), EARTH.
- Verify CPWR voltage meets spec at the terminal block (18 to 32 V dc).

7.1.9.3.2. Discrete Outputs

If a discrete output is not functioning properly, verify the following:

- Check the application software configuration to ensure that the output is configured properly.
- Verify the function of each discrete output wiring by driving each output ON then OFF. Verify the GAP software detects the readback state change.

Released

- Verify each discrete output is connected to the load properly.
- Check the wiring for a loose connection on the terminal blocks, or disconnected, or misconnected cables.
- Verify that the current through the discrete output is not greater than the rating.
- Verify each discrete output is not shorted to another output channel.
- When using a relay for a voltage other than 24 V, ensure that an external power supply with the correct voltage is used.
- When possible, consider using shielded wiring for discrete output cables.
- After verifying all of the above, if FTMs are used, exchange the J1 and J2 cables. If the problem moves to a different channel, replace the cable. If not, replace the module.
- If the readings are incorrect on several channels of the module, corresponding to both connectors or cables, replace the module.
- If replacing the module does not fix the problem and an FTM is used, replace the FTM. The FTM contains only traces and a few discrete components, so failure is extremely unlikely. See instructions for replacing the FTM in Chapter 10.

Note that removing the cover on any module will void the warranty.

IMPORTANT

Recommendation:
The module should be returned to Woodward every 6 years for health check and technical updates. This health check shall increase in frequency when the module is more than 20 years old.

Released

Chapter 8.
Analog I/O Modules

The MicroNet XT Control supports modules for analog inputs and outputs. Inputs include 4 – 20 mA inputs, 0-5V inputs, RTD and thermocouple inputs, and Speed inputs. Outputs include 4 – 20 mA and 0 – 200 mA outputs.

Table 8-1. MicroNet XT Analog I/O Module Part Numbers

Description	Part Number
MicroNet XT Flex AIO	5466-1303
MicroNet XT AIO 16/8	5466-1309
MicroNet XT RTD/TC 12	5466-1306

Table 8-2. MicroNet XT I/O Module Connector Kits (Optional)

Description	Part Number
MicroNet XT I/O Module Connector Kit	8923-3201

8.1. Flex AIO Module

The Flex AIO module has two speed inputs, eight analog inputs, and two proportional actuator driver outputs. The speed inputs are configurable in the GAP application as either MPU, Proximity Probe, or Eddy Current inputs. The eight analog inputs are configurable for 4 – 20 mA, 0 – 5 V, or thermocouple inputs, and the first four channels also support the option of RTD inputs. The actuator outputs are configurable for either 4-20 mA or 0 – 200 mA.

Each AI channel is differential for self-powered sensors but can be software configured for Loop Power mode. Isolated Loop Power (+20 Vdc) is provided for analog input transducers and includes short-circuit/over-voltage protection. **Note:** Do not use the Loop Power output to power any other type of devices.

Firmware upgrade can be performed using Service Pack installation via AppManager.

These modules require no calibration. A module may be replaced with another module of the same part number without any adjustment.

Released



Figure 8-1. Flex AIO Module

8.1.1. Speed Sensor Input Specifications

Table 8-3. Flex AIO Module Speed Sensor Specifications

Number of Channels	2
Input Type	MPU/Prox/Eddy Detector (configured in GAP application)
Speed Input Isolation	500 Vrms to other I/O, chassis, input power, other modules, other I/O types (analog inputs, etc.)
MPU Input Frequency Range	10 Hz to 35 kHz
MPU Input Voltage Range	1 Vrms min, 35 Vrms max (32 Vrms max for hazardous location installations)
MPU Input Impedance	Configurable for 2 or 10 kΩ
PROX Input Frequency Range	0.1 Hz to 35 kHz
PROX Input Voltage Range	0 – 32 VDC, 12 V nominal threshold
PROX Input Impedance	3000 Ohms, 4 mA short circuit current
Eddy Current In Freq Range	0.1 Hz to 35 kHz
Eddy Current In Volt Range	0 – 32 VDC, 12 V nominal threshold
Eddy Current In Impedance	3000 Ohms, 4 mA short circuit current
PROX Power Output, Voltage	24 V ±15 %
PROX Power Output, Current	170 mA, total
PROX Power, Isolation	500 Vrms to chassis, input power, other modules
Channel Isolation	500 VAC to other I/O types, chassis, input power, other modules
Accuracy	± 0.01% of range over full temperature range

Released

Resolution	14 bits minimum at 3600 Hz, with 5 kHz range
Derivative Accuracy (max):	0.10% of range (p-p) over full temperature range
Speed Filter:	1-10,000 ms (2 poles)
Derivative Filter:	1-10,000 ms (2 pole, 1 speed, 1 deriv)
Acceleration Limit:	1-10,000 percent/second
Miswire Protection	Reverse polarity, short-circuit to chassis / each other

8.1.2. - 20 mA/0 – 5 V Input Specifications

Table 8-4. Flex AIO Module 4 – 20 mA/0-5 V Specifications

Number of Channels	Up to 8
AI Input Range	0-25 mA or 0-6 V, set in GAP application
AI Input Isolation	0 V channel to channel 500 Vrms to chassis, input power, other modules
Anti-aliasing Filter	2 poles at 10 ms, nominal (channels 1-6) “Fast” channels have 2 poles at 5 mS, nominal (channels 7 & 8)
AI Accuracy (@ 25 °C)	≤ 0.1% of full scale, over 0 – 24 mA or 0 – 5 V range
AI Accuracy (–40, +70 °C)	≤ 0.5% of full scale, over 0 – 24 mA or 0 – 5 V range
AI Resolution	16 bits of full scale (FS=25 mA, or 0-6V)
AI Input Impedance	200 Ohms ±10% (4-20 mA input)
AI Loop Power, Voltage	20 V ±15 %
AI Loop Power, Current	25 mA per channel
AI Loop Power, Isolation	0 VAC to AI inputs 500 Vrms to chassis, input power, other modules
AI CMRR Over Temp	> 70 dB @ 50/60 Hz (typical)
AI CMVR	12 VDC
AI Overvoltage	±24 VDC continuous (@ 25 °C)
Miswire protection (AI)	reverse polarity, short-circuit to chassis / each other
Miswire protection (LPWR)	reverse polarity, short-circuit to chassis / each other

8.1.3. RTD Specifications

Table 8-5. Flex AIO Module RTD Input Specifications

Number of Channels	Up to 4 (channels 1 – 4)
Input Range	(0 to 600) Ω
Input RTD Type	100 Ω, 200 Ω (2 & 3 wire, European & American curves)
Engineering Units	°C, °F, or ohms (default = °C)
Channel Isolation	0 V channel to channel 500 Vrms to chassis, input power, other modules
Anti-aliasing Filter	2 poles at 10 ms
RTD Excitation Current	1 mA
Hardware Filter	2 poles @ ~10 ms
Accuracy Signal Range	–100 °C to upper curve limit
Accuracy (@ 25 °C)	±1 °C
Accuracy (–40 °C, +70 °C)	±2 °C
Resolution	< 0.1 °C (~15 bits)
CMRR Over Temp	> 86 dB @ 50/60 Hz, 140 dB typical
CMVR	±10 VDC to internal circuit ground
Miswire Protection	reverse polarity, short-circuit to chassis / each other
Over-voltage Protection	± 32 VDC

Released

RTD Range Limits (Ω and °C)

Table 8-6. Flex AIO Module RTD Curve Limits

RTD Type	$Spec_{Lohms}$	$Spec_{Uohms}$	$Spec_{LDegC}$	$Spec_{UDegC}$
100 Ω, E	18.52	390.48	-200	850
100 Ω, A	17.00	396.30	-200	850
200 Ω, E	37.04	594.97	-200	550
200 Ω, A	33.99	602.81	-200	550

RTD Curve Types

Table 8-7. Flex AIO Module RTD Curve Types

European Curve (100 EU, 200 EU)	American Curve (100 US, 200 US)
per IEC 60751 spec	per ITS-90 update
R0 =100 Ω or 200 Ω platinum	R0 =100 Ω or 200 Ω platinum
coeff_A=3.9083E-3, coeff_B=-5.775E-7	coeff_A=3.9848E-3, coeff_B=-5.8700E-7
coeff_C=-4.183E-12	coeff_C=-4.0000E-12
resulting ALPHA coefficient is 0.003850	resulting ALPHA coefficient is 0.003920

8.1.4. Thermocouple Specifications

Table 8-8. Flex AIO Module Thermocouple Input Specifications

Number of Channels	Up to 8
Input TC Types	K, J, T, and mV (per NIST Monograph 175, ITS-90)
Engineering Units	°C, °F, or mV (default = °C)
Channel Isolation	0 V channel to channel 500 Vrms to chassis, input power, other modules
Anti-aliasing Filter	2 poles at 10 ms
Accuracy (–40, +70 °C)	See tables below
High Accuracy Signal Range	+200 °C to 900 °C
High Accuracy (–20 °C, +70 °C)	±1.5 °C with on board CJ for signal range between +200 °C to +900 °C
Standard Accuracy (–40 °C, +70 °C)	±5 °C with on board CJ for signal range from -100 °C to the upper curve limit
CJ Sensors	Each channel has a dedicated CJ sensor
Resolution	< 0.1 °C (~15 bits)
Hardware Filter	2 poles @ ~10 ms
CMRR Over Temp	> 86 dB @ 50/60 Hz, 110 dB typical
CMVR	±10 VDC to DGND, ±110 VDC to chassis
Miswire Protection	reverse polarity, short-circuit to chassis / each other
Over-Voltage Protection	±32 VDC
Cold Junction	Automatic CJ compensation included on board, or external cold junction can be used in GAP

Thermocouple Range Limits (mV, °C)

Table 8-9. Flex AIO Module Thermocouple Range Limits

TC Type	$Spec_{LMV}$	$Spec_{UMV}$	$Spec_{LDegC}$	$Spec_{UDegC}$
Type K	–6.458	54.886	–270	1372
Type J	–8.095	69.553	–210	1200
Type T	–6.258	20.872	–270	400

Released

8.1.5. 4 – 20 mA/0 – 200 mA Proportional Actuator Output Specifications

Table 8-10. Flex AIO Module Proportional Actuator 4 – 20 mA/0 – 200 mA Output Ratings

Number of Channels	2 (each with readbacks)
Output Range	(0 to 24 / 0 - 210) mA, 0 mA during shutdown
Output Isolation	0 V channel to channel 500 Vrms to chassis, input power, other modules
Accuracy (@ 25 °C)	≤ 0.024 mA, 4 – 20 mA range ≤ 0.21 mA, 20 - 160 mA range
Accuracy (–40, +70 °C)	≤ 0.12 mA, 4 – 20 mA range ≤ 1.05 mA, 20 - 160 mA range
Resolution	14 bits of full scale (FS=24 mA, 210 mA)
Load Capability	600 ohms (load + wire resistance) (4 – 20 mA range) 65 Ohms (load + wire resistance) (0 - 200 mA range)
Hardware Filter (max)	3 poles @ 500 µS
Readback Accuracy	< 1 % at 25 °C < 3 % over full temperature range
Readback HW Filter	1 pole @ 0.5 ms nominal
IOLOCK State	Analog output circuits are de-energized during power-up, power-down, voltage failures (5 V), and watchdog failures
Miswire Protection	reverse polarity, short-circuit to chassis / each other
Over Voltage Protection	Overvoltage to 24 VDC

A functional block diagram of the module is shown in Figure 8-2.

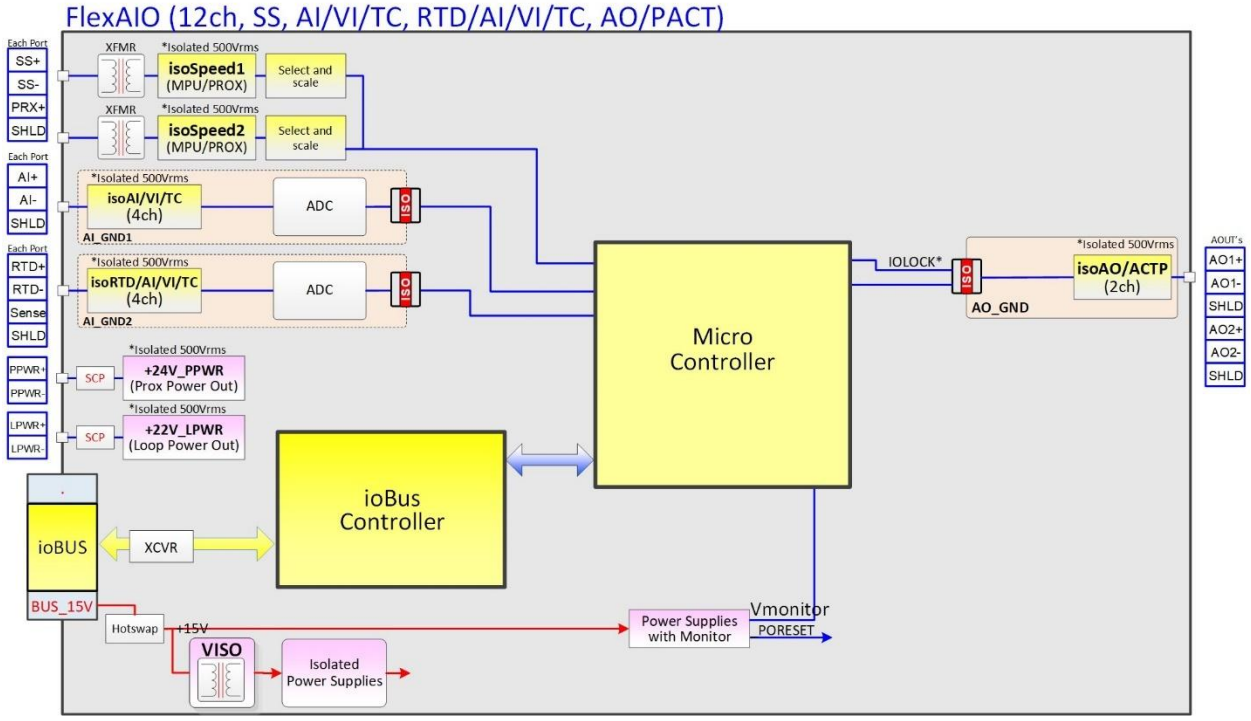

Figure 8-2. Flex AIO Module Block Diagram

Released

8.1.6. Installation

The Flex AIO modules slide into card guides in the control's chassis and plug into the backplane. They are secured with screws at the top and bottom. Each mounting screw should be torqued to 6 Nm (53 lb-in) but can also be hand-tightened.

NOTICE

Backplane Connector Pins

To prevent damage to the backplane connector pins, the shipping connector cover should not be removed until the module is ready to be inserted into the control's chassis. Care should be given when handling the module without the shipping connector cover to avoid broken or bent pins. Make sure the module is aligned in the chassis module guides before fully seating the module.

All the inputs and outputs on the module are accessible on the connectors on the front of the module or on the FTMs, and the channels are labeled to correspond to their designation in the application software (input one on the module will be input one in the application software). Terminal blocks have the ability to be keyed by the end user if required.

All signals, including Loop or Speed Sensor Power, must be shielded pair or shielded triple wiring.

8.1.6.1. Configuration Notes:

8.1.6.1.1. Speed Inputs

Each of the module's two speed channels accept either a passive magnetic pickup unit (MPU), Prox, or Eddy probe. The number of MPU, Prox, and Eddy inputs per module is determined by GAP software.

Prox or Eddy probes may be used to sense very low speeds. See Figure 8-15 for MPU and Prox probe wiring examples. Unused inputs should be set to MPU2K mode and jumpered.

IMPORTANT

It is not recommended for gears mounted on an auxiliary shaft coupled to the rotor to be used to sense speed. Auxiliary shafts tend to turn more slowly than the rotor (reducing speed sensing resolution) and have coupling gear backlash, resulting in less than optimum speed control. For safety purposes, it is also not recommended that the speed sensing device sense speed from a gear coupled to a mechanical drive side of a system's rotor coupling.

IMPORTANT

When configuring the AI_SS MicroNet XT block in GAP, set PROBE_TYPE input field to:
0 - for all inputs working in MPU2K mode
1 - for all inputs working in MPU10K mode
2 - for all inputs working in PROX mode
3 - for all inputs working in Eddy mode
This will allow the input to correctly sense the output signal from specified probe type.

Important: If Speed Input is critical, consider using redundant sensors and redundancy management logic. Verify proper function during commissioning.

8.1.6.1.2. 4 – 20 mA/0-5 V Inputs

All 4-20 mA analog inputs may be used with two-wire ungrounded (loop powered) transducers or isolated (self-powered) transducers. If interfacing to a non-isolated device, which may have the potential of reaching over 12 VDC with respect to the control's common, the use of a loop isolator is recommended to break any return current paths producing erroneous readings.

There are 8 analog input channels which can be configured for either 4-20 mA, 0-5 V, or Thermocouple inputs. See Figure 8-16 for 4-20 mA input connection; inputs may be either loop powered or self-

Released

powered. When a channel fault or a module fault is detected, the application program may annunciate the fault, disable the channel, and stop using data in system calculations or control. Input channels 1-6 have a 2-pole 10ms filter, channels 7 & 8 are designed as fast channels and have a 2-pole 5ms filter for special control functions.

For a 4–20 mA input signal, the Flex AIO Module uses a 200 ohm resistor across the input located onboard the module. Each analog input channel may power its own 4–20 mA transducer.

8.1.6.1.3. RTD Inputs

The first 4 analog input channels can be configured as RTD inputs. See Figure 8-18 for RTD input connection. The RTD type (100 or 200 Ohm) and curve type (American or European) are configured in software. When a channel fault or a module fault is detected, the application program may annunciate the fault, disable the channel, and stop using data in system calculations or control.

NOTICE

Intentional or unintentional grounding, also called "EARTHING", of the RTD sensor may reduce the accuracy of the inputs due to ground loop noise flowing in the wiring. In general, common mode noise riding on the earth ground will degrade performance, depending on the noise present, up to damaging them. EARTHING, intentional or unintentional, provides a path for transients (ground bounce transient currents) or RF noise to flow through the input, either from or to the remote earthing connection. The RTD and TC inputs are designed to survive a limited level of transient noise with intentional or unintentional grounding, or EARTHING, of the inputs. This is limited to transient pulses, as defined in the surge specification IEC 61000-4-5, of ±1 kV with respect to the remote ground injected into the local chassis ground, using shielded cable.

NOTICE

If the RTD sensor grounding is intentionally used, maintaining short RTD cable lengths is recommended. This will aid in reducing the effect of ground loop noise and limit the transient voltage potential that may be developed. The recommended distance is less than 10 up to 30 m separation, for the furthest two separated points in the sub-system. Placing one set of earthed sensors at 30 m from the node and another set of earthed sensors 30 m in the opposite direction is an example of a violation. Therefore, the shortest straight line distance between the grounded sensors of 60 m is a violation of this recommendation.

Determining acceptability of deviations due to ground noise is deterministic. Earth noise due to large currents or voltages may be present, depending on the location in the system.

Determining acceptability of transient noise may be due to indirect lightning strikes and is determined by the level of building structure that is provided for shelter and continuity (conductivity) of the earthing system, voltage peak = Current peak * ground resistance. In the case of a motor transient the peak current may be a few hundred amps, in the case of lightening transients this may be up to ~200,000 amps. With a ±1000 V limited design and a 200 kA transient, the earth ground impedance must be less than 5 milliohms.

Released

NOTICE

Mixing of earth grounded and non-earth grounded RTD or TC sensors in the same module will degrade the performance of all sensor inputs; however, length limitations only apply to the straight line distances from the grounded sensors to the nodes or to each other, whichever is further.

NOTICE

Channel to channel isolation is limited, unused inputs should be shorted at the node terminal blocks to provide known values and limit spurious noise from coupling to the unused inputs and propagating.

8.1.6.1.4. Thermocouple Inputs

All eight analog input channels can be configured as Thermocouple inputs. See Figure 8-19 for thermocouple input connection. The thermocouple type is configured in software.

The module contains individual cold junction (CJ) compensation sensors for each of the 8 channels to support directly wiring T/C sensors to the module. If the wiring material transition is somewhere else, a sensor to provide the control with the temperature at that junction will need to be provided to the control. In the application, there are tunable settings for configuring the control as to where the CJ compensation is being done. The options are: Local on Module, Local on FTM, or External (Remote). Use the External (Remote) option when the material transition is made somewhere other than on the module or FTM and you have a cold junction sensor at the transition point. The remote cold junction sensor will consume an additional thermocouple channel in the system. Refer to the GAP help on how to configure thermocouple channel as a remote cold junction.

When a channel fault or a module fault is detected, the application program may annunciate the fault, disable the channel, and stop using data in system calculations or control. The T/C channel can be configured to either fail high or low in the application program.

8.1.6.1.5. Proportional Actuator Driver Outputs

There are two proportional actuator output channels of 4–20 mA or 0 – 200 mA. See Figure 8-20 for actuator output connection. Each output monitors the output source and return current, and the load resistance for fault detection. Each of the actuator outputs may be individually disabled. When a channel fault or a module fault is detected, the application program may annunciate the fault, disable the channel, and stop using data in system calculations or control.

Important: Verify proper function during commissioning.

8.1.7. Module Wiring

I/O Module Connectors for Direct Wiring

The Flex AIO module has two connection points for signal wiring, labeled J1 (top) and J2 (bottom). Each connection point will accept either a terminal block plug for directly wiring to the module or an FTM cable connector end for wiring remotely using an FTM. For the direct wiring option, the connector plugs for J1 are labeled with terminal numbers 1-36, J2 connector plugs are labeled with terminal numbers 37- 72. J1 and J2 connectors may be keyed differently, so that they will only fit in the correct position on the module. When attaching the connectors or FTM cables to the I/O module, securely tighten the flange screws on both sides to prevent the connectors from accidentally coming loose. Figure 8-3 shows a Flex AIO module field wiring connector.

Released



Figure 8-3. Flex AIO Module Connector

Each connector plug is equipped with an integrated strain relief tab. The strain relief tab can be removed if desired by sliding it down the center line of the connector. Wiring can be secured to the strain relief tab by running zip ties through the provided holes in the tab.

When prepping wire for the connectors, strip the insulation back 0.24-0.28 in (6-7 mm) from the end. The connector will accept the wire sizes outlined in Table 8-11. Note that field wiring should be selected by the customer based on local electrical code regulations.

Table 8-11. Flex AIO Module Connector Wire Gauges

Wire Type	AWG		mm^2	
	Min	Max	Min	Max
Stranded Wire	22	16	0.34	1.5
Solid Conductor	22	16	0.34	1.5
Ferruled Stranded Wire	24	18	0.14	1

Each I/O module ships with a special nylon tool to assist with wiring the connectors, see Figure 8-4. The connectors have spring loaded terminals. To insert a wire into the connector, slide the long end of the tool along the exposed spring on the side of the connector, pressing down firmly. The tool will lock into place and lock the terminal open when the tool is fully inserted into the connector, see Figure 8-5. Caution: Do not try to actuate the terminal spring by prying the tool against the connector, this may lead to damaging the connector or the tool. With the tool fully inserted, the terminal will be opened allowing the wire to be inserted into the hole. To secure the wire, remove the tool from the connector. Be careful to not let the spring terminal close on the wire insulation. If needed, a screwdriver with a maximum 2.5 x 0.4mm blade may be used in place of the supplied tool.



Figure 8-4. Special Nylon Wiring Tool

Released



Figure 8-5. Connector Tool Operation

To troubleshoot or check terminated wiring, the exposed metal springs can be used as probing test points.

Additionally, each I/O module also ships with coding elements. Coding is optional and allows the customer to key each connector uniquely so that they cannot be plugged into the wrong module position, both between J1 and J2 and across modules. There are two steps to keying a connector. The first step is to select one or more locating tabs on the bottom of the terminal on the connector plug and snip it off as shown in Figure 8-6. Then insert the coding elements into the matching terminal slots of the mating connector on the module and break them off the holding tool as shown in Figure 8-7. It is suggested to have a unique keying combination for each connector in the system.

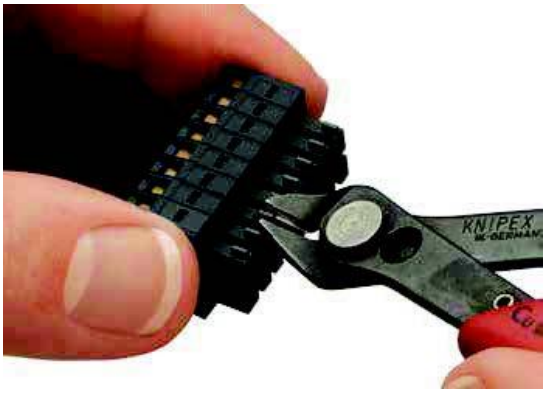

Figure 8-6. Removing Connector Plug Keying Tab

Released

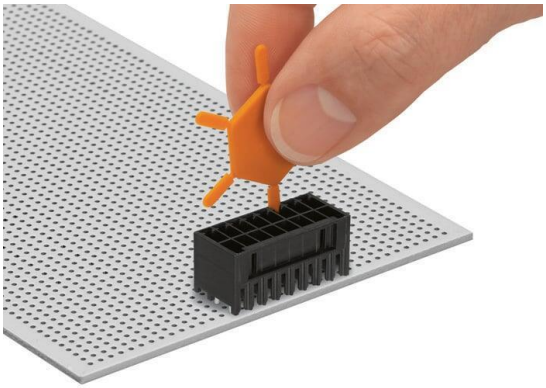

Figure 8-7. Inserting the Keying Element into the Module Connector

The MicroNet XT Flex AIO module connector pinouts are shown in Figure 8-8.

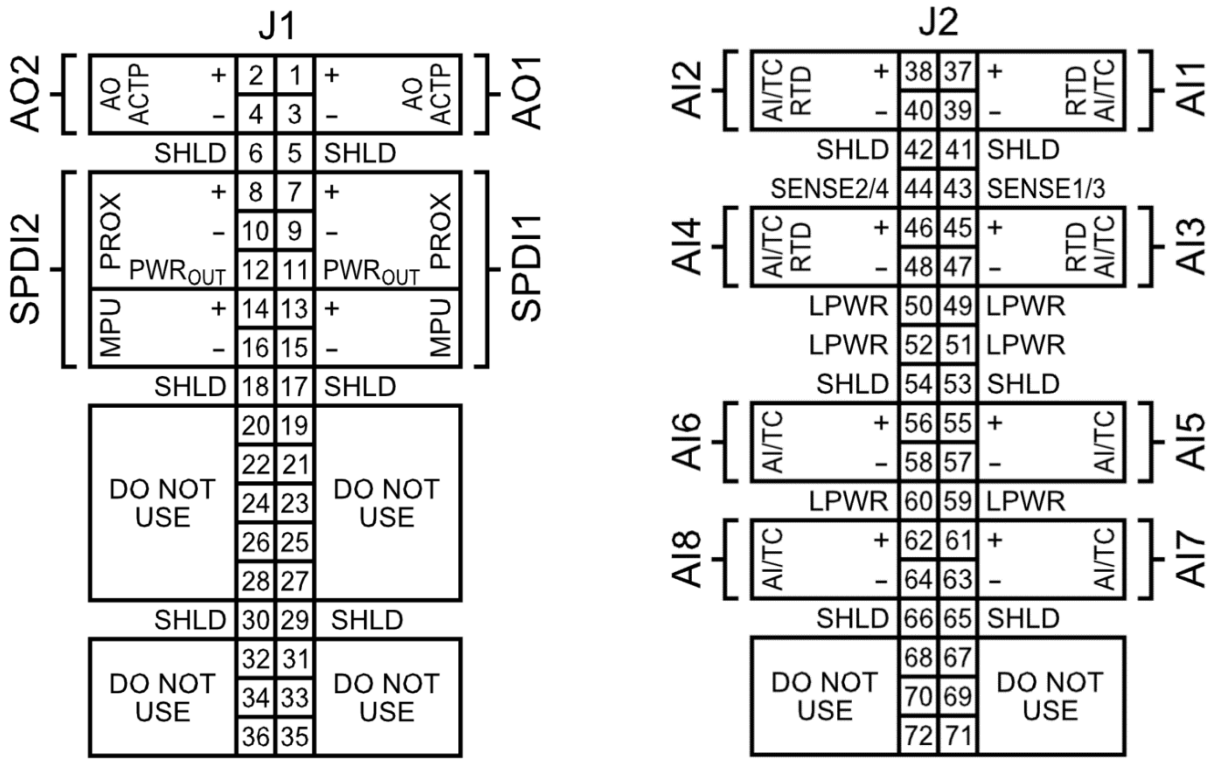

Figure 8-8. Flex AIO Module Connector Pinouts

8.1.7.1. FTM Modules for Remote Wiring

The Analog FTM offers an alternative to the standard front module connector plugs when remote wiring is required. This provides flexibility in system installation and configuration. Importantly, the same I/O module part number can be utilized for both direct wiring and FTM wiring options, allowing for seamless integration and easy adaptation to various wiring preferences.

A mixed wiring approach is supported, meaning that direct wiring and FTMs can be used together within the same system. Each connector found on the I/O module is designed to accommodate an FTM, with one FTM assigned per module connector.

To further enhance installation reliability, FTMs support connector coding. This feature is optional but recommended, as it prevents the accidental crossing of cables between the I/O module connectors or FTMs. For guidance on applying connector and cable coding inserts, refer to the direct wiring section, which provides detailed instructions for proper coding procedures.

Released

The module is designed to work with both the basic analog FTM and the analog FTM equipped with Remote Cold Junction Sensors (RCJS). The selection of the appropriate FTM depends on the specific requirements of the installation. If any of the analog input channels are set up to function as thermocouple inputs, it is necessary to use an analog FTM that includes remote cold junction sensors. This ensures accurate temperature measurement and compensation for thermocouple applications.

For each type of FTM, whether standard or with RCJS, there are two available configurations to accommodate different installation preferences. Users can choose between screw terminal blocks and spring terminal blocks. This flexibility allows for easier adaptation to various wiring practices and installation environments.

Table 8-12. MicroNet XT Analog I/O FTM Part Numbers

Description	Part Number
MicroNet XT AIO FTM – Screw Terminals	5466-5010
MicroNet XT AIO FTM – Spring Terminals	5466-5011
MicroNet XT AIO with RCJS FTM – Screw Terminals	5466-5012
MicroNet XT AIO with RCJS FTM – Spring Terminals	5466-5013

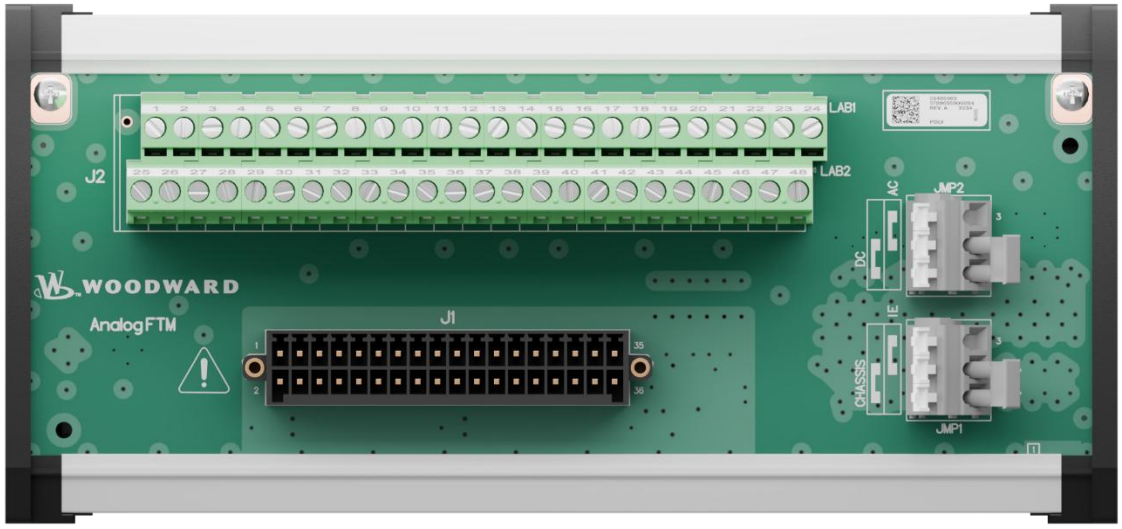

Figure 8-9. Analog FTM with Screw Type Terminals

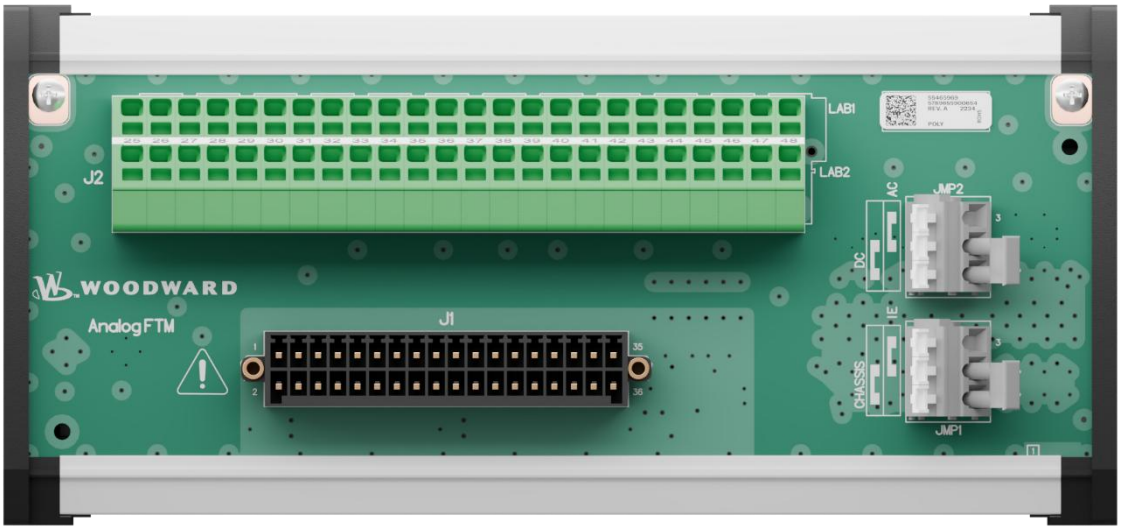

Figure 8-10. Analog FTM with Spring Type Terminals

Released

Each FTM is connected to its corresponding I/O module by means of an FTM cable. To accommodate different installation requirements, the FTM cable is available in multiple lengths. This flexibility allows for optimal positioning of the FTMs within the control cabinet, making installation and maintenance easier regardless of cabinet size or layout.

Table 8-13. MicroNet XT Analog I/O FTM Cable Part Numbers

Length	Part Number
6ft (1.8m)	5417-2106.6
8ft (2.4m)	5417-2106.8
10ft (3m)	5417-2106.10
12ft (3.6m)	5417-2106.12
14ft (4.3m)	5417-2106.14
16ft (4.9m)	5417-2106.16
18ft (5.5m)	5417-2106.18
20ft (6.1m)	5417-2106.20



Figure 8-11. Black Analog FTM Cable

To ensure proper connection and reliable operation of the FTMs, it is essential to prepare the field wiring correctly before installation. Begin by stripping the insulation from the end of the wire, removing between 0.24 and 0.28 inches (6 to 7 millimeters) to expose the conductor. This preparation allows the wire to fit securely into the terminal and make good electrical contact.

The FTMs are designed to accommodate the wire sizes specified in

Released

. It is the responsibility of the customer to select appropriate field wiring in accordance with local electrical code regulations to ensure compliance and safety during installation and operation.

For FTMs equipped with screw-type terminals, it is important to secure the connection by tightening the screw to a torque value between 4.4 lbf-in and 5.3 lbf-in (0.5 Nm to 0.6 Nm). Applying the correct torque helps maintain a stable and secure electrical connection, reducing the risk of loose wiring or terminal damage.

Released

Table 8-14. FTM Wire Guages

Wire Types	AWG		mm²	
	Min	Max	Min	Max
Stranded Wire	24	12	0.2	2.5
Solid Conductor	24	12	0.2	4
Ferruled Stranded Wire	24	14	0.25	2.5

The Flex AIO module FTM pinouts for the analog outputs and speed inputs are shown in Figure 8-12. The FTM cable for these signals must be plugged into the J1 connector of the Flex AIO module.

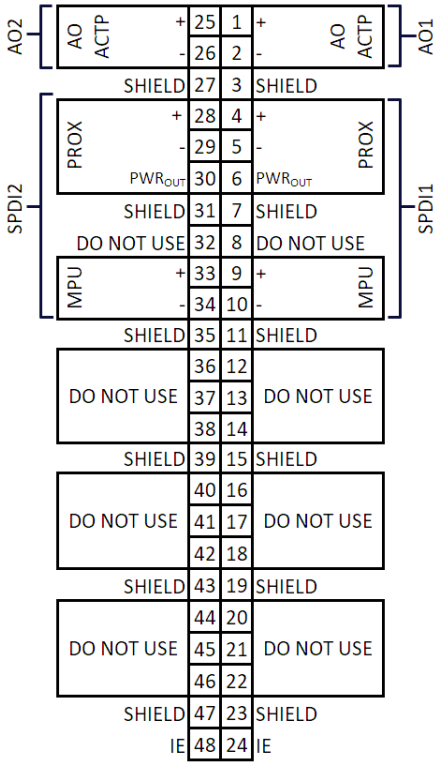

Figure 8-12. FTM Wiring for the Flex AIO Analog Outputs and Speed Inputs (J1)

The Flex AIO module FTM pinouts for the analog inputs are shown in Figure 8-13. The FTM cable for these signals must be plugged into the J2 connector of the Flex AIO module.

Released

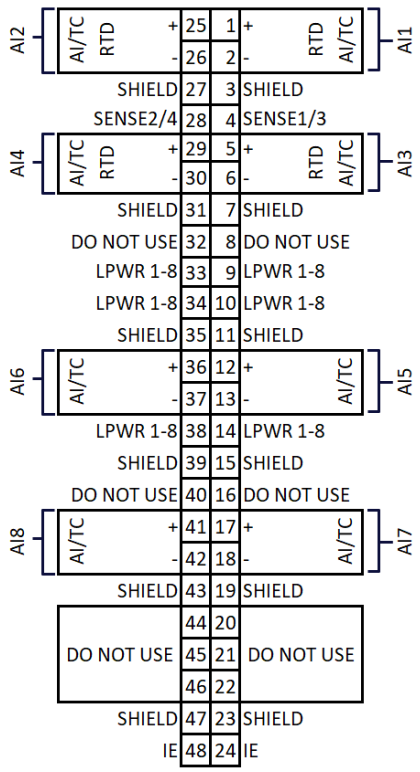

Figure 8-13. FTM Wiring for the Flex AIO Analog Inputs (J2)

The FTM provides four distinct options for grounding shield drain wires. This flexibility is achieved using two configuration jumpers, labeled JMP1 and JMP2, located on each FTM. For best all-around EMC performance, Woodward recommends the default jumper settings.

8.1.8. JMP1: Ground Selection

JMP1 determines whether the shield drain wires are connected to the cabinet ground or to an isolated ground known as Instrument Earth (IE). By default, JMP1 is set to connect shields to the cabinet ground, which is established via the DIN rail. The FTMs achieve grounding to the DIN rail through metal DIN rail clips attached to the module base.

- Cabinet Ground: To tie the shields directly to the cabinet ground, place the jumper in the “CHASSIS” position of JMP1.
- Instrument Earth (IE): For installations that require a separate isolated ground for field wiring, move the jumper to the “IE” position. The IE grounding wire should then be terminated at terminals 24 or 48, as indicated in Figure 8-12 and Figure 8-13.

The factory default configuration for JMP1 is the “CHASSIS” position, connecting shield drain wires to the cabinet ground.

8.1.9. JMP2: Direct or Capacitive Coupling

JMP2 allows further customization by configuring whether the shields are directly shorted to the selected ground or capacitively coupled to it. The shields can be:

- Directly Shorted (DC Coupling): In this mode, the shield is directly connected to either cabinet ground or IE, depending on the JMP1 setting. This is the factory default position for JMP2.
- Capacitively Coupled (AC Coupling): To enable AC coupling, place the jumper in the “AC” position of JMP2. This configuration couples the shield to ground through a capacitor, providing an alternative grounding method if required by the installation.

By default, JMP2 is set for direct coupling (“DC”) to ground from the factory.

Released

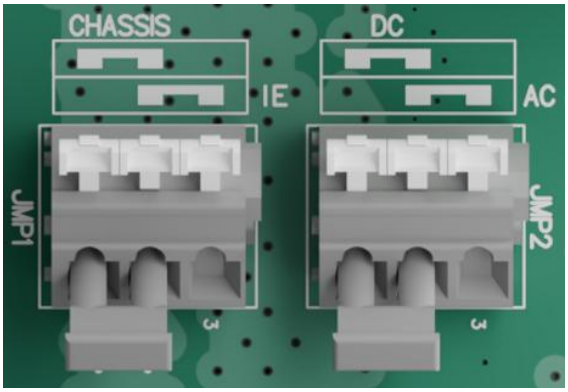

Figure 8-14. FTM Shield Grounding Configuration Jumpers

8.1.10. Field Wiring

Figure 8-15 shows the Flex AIO module wiring for MPU and proximity probe sensors.



Figure 8-15. Flex AIO Module MPU and Prox Probe Interface Wiring

Figure 8-16 shows the Flex AIO module wiring for self-powered (left) and loop powered (right) analog inputs.

Released

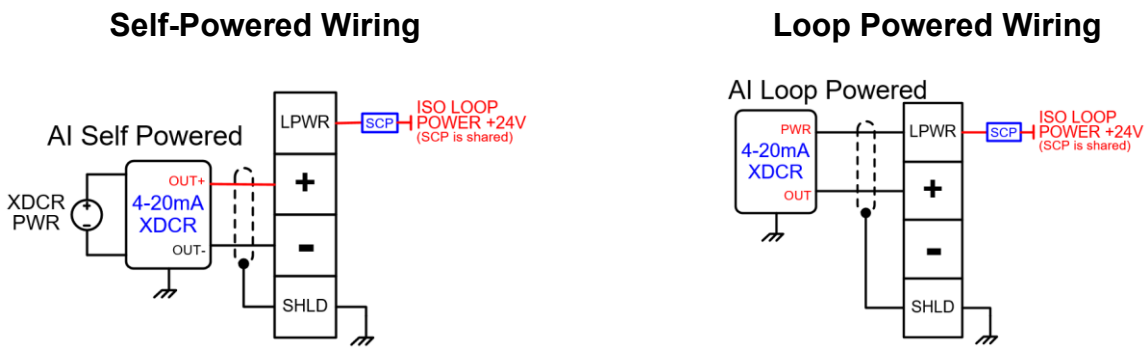

Figure 8-16. Flex AIO Module Self and Loop Powered Analog Input Wiring

Figure 8-17 shows the Flex AIO module voltage input wiring.

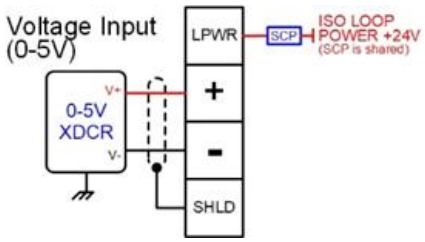

Figure 8-17. Flex AIO Module Voltage Input Wiring

Figure 8-18 shows the Flex AIO module wiring for 2 and 3 wire RTD inputs.

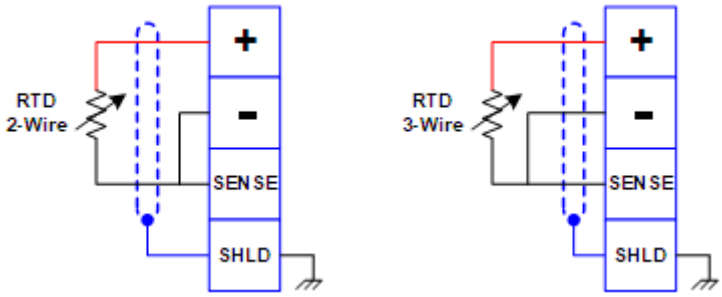

Figure 8-18. 2 and 3 Wire Flex AIO Module RTD Input Wiring

Figure 8-19 shows the Flex AIO module wiring for thermocouple inputs.

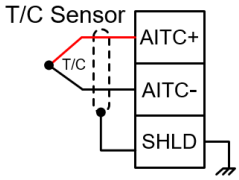

Figure 8-19. Flex AIO Module Thermocouple Input Wiring

Released

Figure 8-20. Flex AIO Module Proportional Actuator Output Wiring shows the Flex AIO module wiring for a proportional actuator driver outputs.

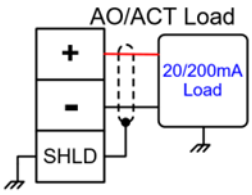

Figure 8-20. Flex AIO Module Proportional Actuator Output Wiring

External wiring connections for reverse-acting controls are identical to those for direct-acting controls. Actuator direction configuration is setup within the software.

8.1.11. Troubleshooting

Each module contains a status LED that can illuminate GREEN or RED, to annunciate the module health.

A green LED indicates the module is healthy and operational.
A red LED indicates the module is in IOLOCK, initializing, in HALT mode, or has a fault.

During initialization of the module, (after every CPU reset), the status LED turns red. The CPU then tests each I/O module. If the diagnostic test is not passed, the status LED remains red and/or blinks, otherwise, the status LED turns green. If the status LED remains red, the module may be located in the wrong slot, be held in IOLOCK or HALT mode by the CPU, or be faulty.

8.1.11.1. Flash Code Table

Flash codes are comprised of up to two numbers and are shown in Table 8-15. Each number is denoted by 0.25 second flashes and pauses, with one second pauses between the two numbers and a three second pause before the code repeats. Flash code definitions are module specific. Definitions for the AIO 16/8 module are in Table 8-15.

Released

Table 8-15. Flex AIO LED Indications of Failure

	Flash Code	Failure
Main Application	1, 2	Tick Slip Fault
	1, 3	MFT Timing Fault
	1, 4	Rate Group Key Fault
	1, 5	IPD MFT or IPD RG Timing Fault
	1, 6	OPD MFT of OPD RG Timing Fault
	1, 7	Background Slip Fault
	1, 8	Watchdog Fault
	1, 9	GAP Application Requested Fault
	2, 1	Parameter Fault
	2, 2	Parameter Version Fault
	2, 3	SPI Timing Fault
	2, 4	Non-volatile Memory (read/write) Fault
	2, 6	Digital Core Power Supply Fault
	2, 7	Software Fault
	2, 8	Software Initialization Fault
	2, 9	Software Exception
	2, 10	CPU Fault
	2, 11	Invalid Application Part Number
	2, 12	Invalid Application Revision
	2, 13	Invalid FPGA Part Number
	2, 14	Invalid FPGA Revision
	2, 15	HSSL Communication Fault
Bootloader	3, 1	Invalid Application Image
	3, 2	Invalid FPGA Image
	3, 3	Invalid Bootstrap Images
	3, 4	FPGA Startup Failed
	3, 5	Startup Handshake Not Acknowledged.
	4, 1	System Clocks Initialization Error
	4, 2	Internal MCU Flash Memory Error
	4, 3	External SPI Flash Memory Error
	4, 4	MCU Exception Detected
	4, 5	Internal MCU RAM Memory Error
	4, 6	MCU Initialization Error
	4, 7	SMU Initialization Error
	4, 8	SMU Activation Error
	4, 9	Runtime Recovery Failed
	4, 10	NULL-pointer Dereference
	4, 11	Destructive Unlock Failed
	4, 12	Flash Loader Initialization Failed
	4, 13	Invalid Bootloader Part Number
	4, 14	Invalid Hardware ID
	4, 15	Invalid Bootloader Revision
Bootstrap	5, 1	System Clocks Initialization Error
	5, 2	Internal MCU Flash Memory Error
	5, 3	External SPI Flash Memory Error
	5, 4	HSSL Communication Error
	5, 5	MCU Exception Detected
	5, 6	MCU Initialization Error
	5, 7	Module Slot Initialization Failed
	5, 8	Flash Loader Initialization Failed
	5, 9	Invalid Bootstrap Part Number
	5, 10	Invalid Bootstrap Revision
	5, 11	Invalid FPGA Part Number
	5, 12	Invalid FPGA Revision

Detailed fault descriptions for flash codes can be obtained in AppManager.

Released

8.1.11.2. Fault Detection

In addition to detecting MicroNet XT Flex AIO Module hardware faults, the application software may detect I/O channel faults.

Analog I/O Faults: The module monitors the I/O control voltage and annunciates faults. The application software determines the course of action in the event of a fault.

Microcontroller Faults: The system monitors a software watchdog, a hardware watchdog, and a software watchdog on the bus communications. All outputs are shut down in the event of a microcontroller fault.

If during normal control operation all of the I/O module status LEDs are red, check the CPU module for a failure. When a module fault is detected, its outputs will be disabled or de-energized.

8.1.11.3. Troubleshooting Guide

If during normal control operation, all of the I/O modules status LEDs are red, check the CPU module for a failure. Check the CPU module for a fault or an IOLOCK condition. The IOLOCK status could be caused by the application being in configuration mode or the CPU having no application in run mode.

If during normal control operation only the Flex AIO module's status LED is red or flashing red, ensure that it is installed in the correct slot. If it is, then replace that module. See instructions for replacement in Chapter 10 Installation (System Level Installation). When a module fault is detected, its outputs will be disabled or de-energized.

8.1.11.3.1. Speed Sensor Inputs

Speed ranges are selected from the GAP and the signal is pre-scaled accordingly. The pre-scaled signal then goes to a counter where the period of the signal is measured. The module samples the counter's values every 100 microseconds and performs a divide to generate a digital speed signal. Every 100 microseconds, a digital-filter algorithm is executed to average the speed values in order to improve speed-sensor resolution at input frequencies greater than 200 Hz. This digital filter also provides a derivative output. Once every rate group (5-160 ms), the latest speed and derivative information is moved to the CPU module. The module also provides sensor voltage monitoring in the GAP application to aid in monitoring and troubleshooting the inputs.

If a speed sensor input is not functioning properly, verify the following:

- Check the application software configuration to ensure that the input is configured properly.
- Check that the cable is shielded and the shield is properly grounded per the Shields and Grounding section in Chapter 10.
- Verify that the signal waveform is clean and void of double zero crossings.
- Check the wiring. Look for a loose connection at the terminal blocks and disconnected or misconnected cables.
- Verify that each sensor is wired to the correct channel (i.e.: MPU1 to channel 1)
- Verify that no ground connection exists and that the resulting main 50 Hz or 60 Hz signal is absent.
    - Verify that MPU+, PROX+ is not connected to PS(+), PS(–), EARTH
    - Verify that MPU-, PROX- is not connected to PS(+), PS(–), EARTH
- Verify shield wires are not shorted to signals (MPU+, MPU-, PROX+, PROX-)
- Verify shield wires are not shorted to input power PS(+), PS(–)
- After verifying all of the above, if FTMs are used, exchange the J1 and J2 cables. If the problem moves to a different channel, replace the cable. If not, replace the module.
- If the readings are incorrect on several channels of the module, corresponding to both connectors or cables, replace the module.
- If replacing the module does not fix the problem and an FTM is used, replace the FTM. The FTM contains only traces and a few discrete components, so failure is extremely unlikely. See instructions for replacing the FTM in Chapter 10.

MPUs

If a magnetic pickup input is not functioning properly, verify the following:

- Verify MPU sensors are wired to MPU terminal block location (rather than the Prox probe location).
- Perform the open wire test available on the channel block in GAP

Released

- Measure the input voltage on the terminal block. It should be in the range of 1-35 VRMS.
- Measure the frequency. It should be in the range of 10 Hz - 35 kHz.

Prox Probes

If a proximity probe input is not functioning properly, verify the following:

- Verify PROX sensors are wired to PROX terminal block location (rather than the MPU probe location)
- Measure the input voltage on the terminal block, compare to the GAP configured threshold voltage.
- Measure the frequency. It should be in the range of 0.1 Hz to 35 kHz.
- If using Prox Power, verify that wiring is correct and isolation between sensors is maintained.
- If using Prox Power, verify PPWR1+,PPWR1- are not connected to PS(+), PS(-), EARTH.
- If using Prox Power, verify PPWR1+,PPWR1- are not connected to each other.

Eddy Probes

If an eddy probe input is not functioning properly, verify the following:

- Measure the input voltage on the terminal block. It should be in the range of 7 - 24 V-peak.
- Measure the frequency. It should be in the range of 1 Hz to 35 kHz.

8.1.11.3.2. Analog Inputs

If an analog input is not functioning properly, verify the following:

- Check the application software configuration to ensure that the input is configured properly.
- Verify or perform the channel calibration in the GAP application.
- Check that the cable is shielded and the shield is properly grounded per the Shields and Grounding section in Chapter 10.
- If all of the inputs are reading high, check that the 24 VDC is not connected across the input directly.
- Check the wiring. If the inputs are reading 0 or the engineering units that correspond to 0 mA, look for a loose connection on the terminal blocks, disconnected or misconnected cables, etc.
- Measure the input voltage on the terminal block. It should be in the range of 0-5 V.
- Verify that the input terminals are not shorted to PS(+), PS(–), EARTH.
- Verify that the input terminals are not shorted to another channel.
- Verify that there are no or minimal AC components to the Analog Input signal. Improper shielding may introduce AC noise on the input terminals.
- After verifying all of the above, if FTMs are used, exchange the J1 and J2 cables. If the problem moves to a different channel, replace the cable. If not, replace the module.
- If the readings are incorrect on several channels of the module, corresponding to both connectors or cables, replace the module.
- If replacing the module does not fix the problem and an FTM is used, replace the FTM. The FTM contains only traces and a few discrete components, so failure is extremely unlikely. See instructions for replacing the FTM in Chapter 10.

AI (Non-loop), Analog Inputs

- Verify that external powered transducers are NOT used with these self-powered channels.
- Functionally verify the wiring for each AI channel using a simulator source.

AI (Loop Power), Analog Inputs

- Verify that external transducers are connected to these channels.
- Verify the LPWR voltage level (+20 VDC) is correct for the transducer.
- Verify each LPWR(+) terminal is wired to the transducer POWER(+).

TC, Thermocouple Inputs

- Verify no wires are landed accidently on the NC, no-connect terminals.
- Functionally verify the wiring for each TC channel using a simulator source.
- TC OPENS: A TC input will read MAX DegC if the (+) or (–) wire is broken / open.
- TC SHORTS: A TC input will read 0 DegC if the (+) and (–) wires are shorted.

RTD, Inputs

- Verify each RTD(sense) terminal is connected properly for 3-wire sensors.
- Verify each RTD(sense) terminal is jumpered to RTD(–) for 2-wire sensors.

Released

- Functionally verify the wiring for each RTD channel using a simulator source.
- RTD OPENS: RTD channels will read MAX DegC if the (+) or (–) wire is broken.

8.1.11.3.3. Proportional Actuator Driver Outputs

If an actuator driver output is not functioning properly, verify the following:

- Check the application software configuration to ensure that the input is configured properly.
- Verify or perform the channel calibration in the GAP application.
- Check that the cable is shielded and the shield is properly grounded per the Shields and Grounding section in Chapter 10.
- Disconnect the field wiring and connect a resistor across the output. Verify correct output current with a meter. Verify the correct SRC_RDBK & RET_RDBK values in GAP. If the output is correct across the resistor, there is a problem with the field wiring.
- Check the load resistance to ensure that it is not greater than 600 ohms.
- Check to ensure that the load wiring is isolated.
    - Verify each AO(+,–) is not shorted to another output channel.
    - Verify each AO(+,–) is not shorted to another analog input channel.
    - Verify each AO(+) terminal is not shorted to PS(+), PS(–), EARTH.
    - Verify each AO(–) terminal is not shorted to PS(+), PS(–), EARTH.
- After verifying all of the above, if FTMs are used, exchange the J1 and J2 cables. If the problem moves to a different channel, replace the cable. If not, replace the module.
- If the readings are incorrect on several channels of the module, corresponding to both connectors or cables, replace the module.
- If replacing the module does not fix the problem and an FTM is used, replace the FTM. The FTM contains only traces and a few discrete components, so failure is extremely unlikely. See instructions for replacing the FTM in Chapter 10.

Note that removing the cover on any module will void the warranty.

IMPORTANT

Recommendation:
The module should be returned to Woodward every 6 years for health check and technical updates. This health check shall increase in frequency when the module is more than 20 years old.

Released

8.2. AIO 16/8 Module

The AIO 16/8 module provides 16 analog inputs and 8 analog outputs. The analog inputs are GAP configurable for 4-20 mA or 0-5V (dc) operation. The eight analog outputs are configurable as 4-20 mA or 0-20 mA outputs.

Each AI channel is differential for self-powered sensors but can be software configured for Loop Power mode. Isolated Loop Power (+20 Vdc) is provided for analog input transducers and includes short-circuit/over-voltage protection. **Note:** Do not use the Loop Power output to power any other type of devices.

Firmware upgrade can be performed using Service Pack installation via AppManager.

These modules require no calibration. A module may be replaced with another module of the same part number without any adjustment.



Figure 8-21. AIO 16/8 Module

8.2.1. Analog Inputs Specifications (4-20 mA, 0-5Vdc)

This AIO 16/8 module provides two isolated groups of analog inputs (ch1-8 and ch9-16). Each channel is software configurable for 4-20mA (self-powered or loop powered) or 0-5V (dc) operation.

Table 8-16. AIO 16/8 Analog Input Specifications

Number of channels	16 Analog Inputs
AI Input Range	0-24 mA or 0-5V (software configurable)
AI Input Isolation	0 V channel to channel. Group1 (AI1-8) has 500 Vrms to EARTH and to all other I/O

Released

	Group2 (AI9-16) has 500 Vrms to EARTH and all other I/O
AI Accuracy (@ 25 °C)	≤ 0.024 mA (0.1% of FS=24 mA), ≤ 5.5 mVdc (0.1% of FS=5.5V)
AI Accuracy (–40, +70 °C)	≤ 0.120 mA (0.5% of FS=24 mA), ≤ 27.5 mVdc (0.5% of FS=5.5V)
AI Resolution	~15.8 bits of full scale (FS=24mA or 5.5V)
AI Hardware filter	2 poles @ ~10 ms **Fast channels (ch8, ch16) have 2 poles @ ~5 ms
AI Input Impedance	249.5 ohms ± 1% for mA input mode, 100K for voltage input mode
AI Loop power output1	20 V ± 15% (0-220 mA) with short circuit & diode protection
AI Loop power output2	20 V ± 15% (0-220 mA) with short circuit & diode protection
AI Loop power Isolation	500 Vrms to EARTH, to other AI group, and all other I/O
AI CMRR over temp	> 70 dB @ 50/60 Hz (typical 86 db)
AI CMVR	± 50 V (dc), amplifier capable of ± 200 V (dc)
AI Overvoltage	± 24 V (dc) @ 25c
AI Miswire Protection	Reverse polarity, short-circuit to chassis / each other

8.2.2. Analog Output Specifications (4-20 mA)

This AIO 16/8 module provides an isolated group of (8) 4-20 mA outputs. Each output can drive up to 600 ohm loads and provides fault monitoring of individual source and return currents.

Table 8-17. AIO 16/8 Analog Output Specifications

Number of Channels	8 (each with SRC and RET readbacks)
AO Output Range	0 to 24 mA, 0 mA during shutdown
AO Output Isolation	0 V channel to channel 500 Vrms to EARTH and all other I/O
AO Accuracy (@ 25 °C)	≤ 0.024 mA (0.1% of FS=24 mA)
AO Accuracy (–40, +70 °C)	≤ 0.060 mA (0.25% of FS=24 mA)
AO Resolution	~14 bits of full scale
AO Hardware filter (max)	4 poles @ approx 200 µs
AO Load Capability	600 Ω at 20 mA
AO Output Readbacks	(0 to 24) mA, source and return
AO SRC Readback Accuracy	< 0.240mA (1% of FS=24mA) at 25°C < 0.720mA (3% of FS=24mA), over full temperature range
AO RET Readback Accuracy	< 0.240mA (1% of FS=24mA) at 25°C < 0.720mA (3% of FS=24mA), over full temperature range
AO Readback HW Filter	4ms nominal
IOLOCK state	AO circuits are driven to 0 mA during power-up, power-down, core voltage failures, and watchdog failures
Miswire Protection	Reverse polarity, short-circuit to chassis / each other
Overvoltage Protection	Overvoltage to 24 VDC

A functional block diagram of the module is shown in Figure 8-22.

Released

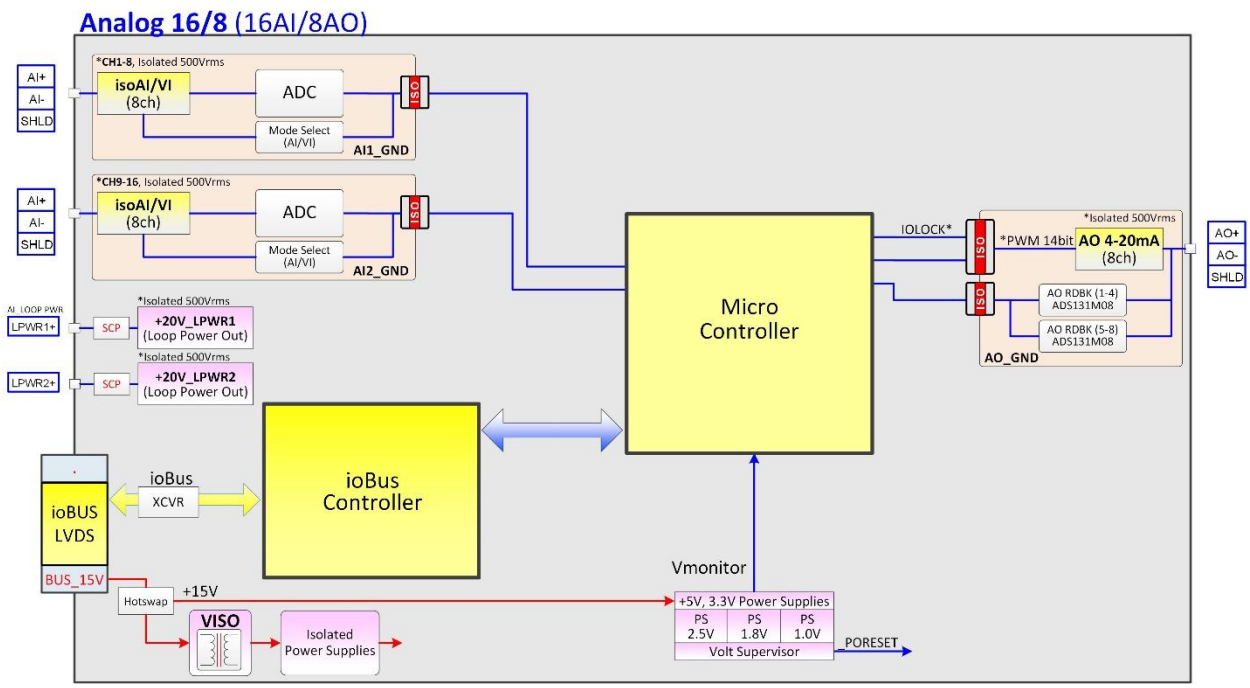

Figure 8-22. AIO 16/8 Module Block Diagram

8.2.3. Installation

The AIO 16/8 modules slide into card guides in the control's chassis and plug into the backplane. They are secured with screws at the top and bottom. Each mounting screw should be torqued to 6 Nm (53 lb-in) but can also be hand-tightened.

NOTICE

Backplane Connector Pins

To prevent damage to the backplane connector pins, the shipping connector cover should not be removed until the module is ready to be inserted into the control's chassis. Care should be given when handling the module without the shipping connector cover to avoid broken or bent pins. Make sure the module is aligned in the chassis module guides before fully seating the module.

All the inputs and outputs on the module are accessible on the connectors on the front of the module or on the FTMs, and the channels are labeled to correspond to their designation in the application software (input one on the module will be input one in the application software). Terminal blocks have the ability to be keyed by the end user if required.

All signals including Analog Inputs, Analog Outputs, and Loop Power must be shielded, twisted pair wiring.

8.2.3.1. Configuration Notes:

8.2.3.1.1. Analog Inputs

All 4-20 mA analog inputs may be used with two-wire ungrounded (loop powered) transducers or isolated (self-powered) transducers. If interfacing to a non-isolated device, which may have the potential of reaching over 12 VDC with respect to the control's common, the use of a loop isolator is recommended to break any return current paths producing erroneous readings.

There are 16 analog input channels which can be configured for either 4-20 mA, 0-5 V. When a channel fault or a module fault is detected, the application program may annunciate the fault, disable the channel, and stop using data in system calculations or control. Input channels 1-7 and 9-15 have a 2-pole 10ms

Released

filter, channels 8 & 16 are designed as fast channels and have a 2-pole 5ms filter for special control functions.

8.2.3.1.2. Analog Outputs

There are eight analog 4–20 mA output channels. Each output monitors the output source and return current for fault detection. Each of the analog outputs may be individually disabled. When a channel fault or a module fault is detected, the application program may annunciate the fault, disable the channel, and stop using data in system calculations or control.

Important: Verify proper function during commissioning.

8.2.4. Module Wiring

I/O Module Connectors for Direct Wiring

The AIO 16/8 module has two connection points for signal wiring, labeled J1 (top) and J2 (bottom). Each connection point will accept either a terminal block plug for directly wiring to the module or an FTM cable connector end for wiring remotely using an FTM. For the direct wiring option, the connector plugs for J1 are labeled with terminal numbers 1-36, J2 connector plugs are labeled with terminal numbers 37- 72. J1 and J2 connectors may be keyed differently, so that they will only fit in the correct position on the module. When attaching the connectors or FTM cables to the I/O module, securely tighten the flange screws on both sides to prevent the connectors from accidentally coming loose. Figure 8-23 shows an AIO 16/8 module field wiring connector.



Figure 8-23. AIO 16/8 Module Connector

Each connector plug is equipped with an integrated strain relief tab. The strain relief tab can be removed if desired by sliding it down the center line of the connector. Wiring can be secured to the strain relief tab by running zip ties through the provided holes in the tab.

When prepping wire for the connectors, strip the insulation back 0.24-0.28 in (6-7 mm) from the end. The connector will accept the wire sizes outlined in Table 8-18. Note that field wiring should be selected by the customer based on local electrical code regulations.

Released

Table 8-18. AIO 16/8 Module Connector Wire Gauges

Wire Type	AWG		mm^2	
	Min	Max	Min	Max
Stranded Wire	22	16	0.34	1.5
Solid Conductor	22	16	0.34	1.5
Ferruled Stranded Wire	24	18	0.14	1

Each I/O module ships with a special nylon tool to assist with wiring the connectors, see Figure 8-24. The connectors have spring loaded terminals. To insert a wire into the connector, slide the long end of the tool along the exposed spring on the side of the connector, pressing down firmly. The tool will lock into place and lock the terminal open when the tool is fully inserted into the connector, see Figure 8-25. Caution: Do not try to actuate the terminal spring by prying the tool against the connector, this may lead to damaging the connector or the tool. With the tool fully inserted, the terminal will be opened allowing the wire to be inserted into the hole. To secure the wire, remove the tool from the connector. Be careful to not let the spring terminal close on the wire insulation. If needed, a screwdriver with a maximum 2.5 x 0.4mm blade may be used in place of the supplied tool.



Figure 8-24. Special Nylon Wiring Tool



Figure 8-25. Connector Tool Operation

To troubleshoot or check terminated wiring, the exposed metal springs can be used as probing test points.

Additionally, each I/O module also ships with coding elements. Coding is optional and allows the customer to key each connector uniquely so that they cannot be plugged into the wrong module position, both between J1 and J2 and across modules. There are two steps to keying a connector. The first step is to select one or more locating tabs on the bottom of the terminal on the connector plug and snip it off as shown in Figure 8-26. Then insert the coding elements into the matching terminal slots of the mating

Released

connector on the module and break them off the holding tool as shown in Figure 8-27. It is suggested to have a unique keying combination for each connector in the system.

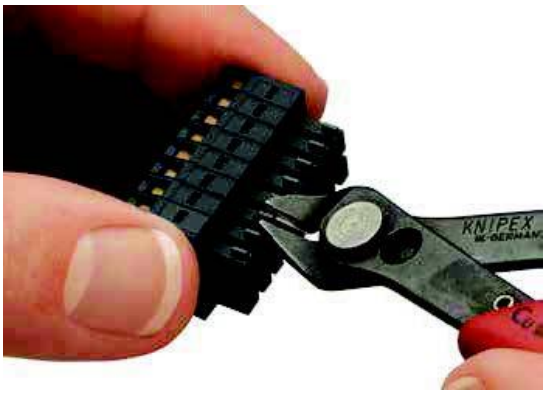

Figure 8-26. Removing Connector Plug Keying Tab

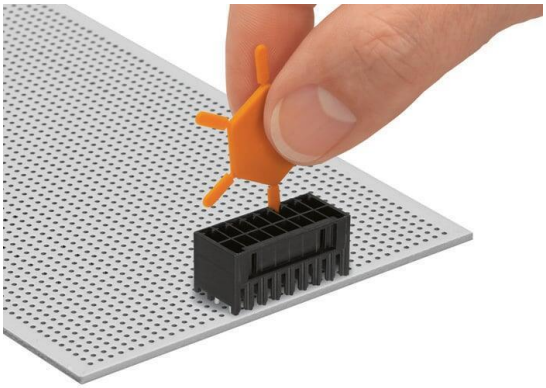

Figure 8-27. Inserting the Keying Element into the Module Connector

The MicroNet XT AIO 16/8 module connector pinouts are shown in Figure 8-8.

Released

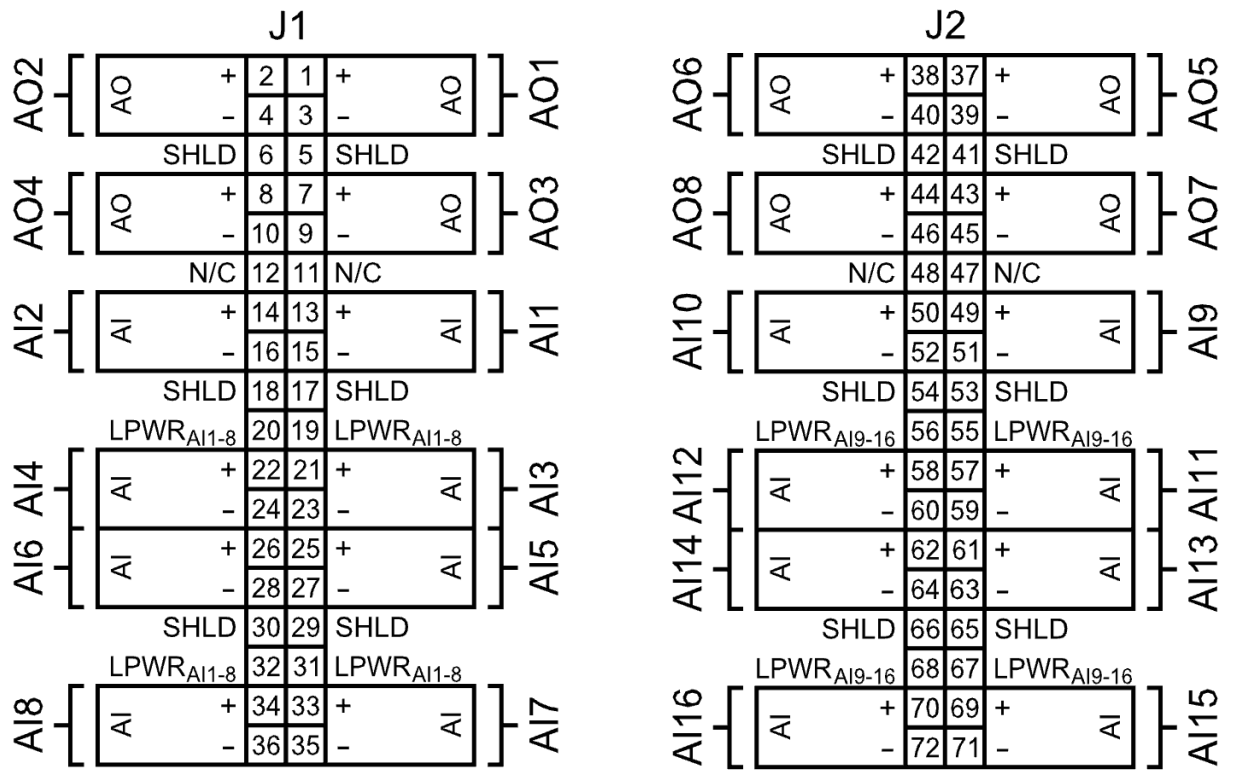

Figure 8-28. AIO 16/8 Module Connector Pinouts

8.2.4.1. FTM Modules for Remote Wiring

The Analog FTM offers an alternative to the standard front module connector plugs when remote wiring is required. This provides flexibility in system installation and configuration. Importantly, the same I/O module part number can be utilized for both direct wiring and FTM wiring options, allowing for seamless integration and easy adaptation to various wiring preferences.

A mixed wiring approach is supported, meaning that direct wiring and FTMs can be used together within the same system. Each connector found on the I/O module is designed to accommodate an FTM, with one FTM assigned per module connector.

To further enhance installation reliability, FTMs support connector coding. This feature is optional but recommended, as it prevents the accidental crossing of cables between the I/O module connectors or FTMs. For guidance on applying connector and cable coding inserts, refer to the direct wiring section, which provides detailed instructions for proper coding procedures.

This module is designed to work with the standard analog FTM. There are two available configurations of the analog FTM to accommodate different installation preferences. Users can choose between screw terminal blocks and spring terminal blocks. This flexibility allows for easier adaptation to various wiring practices and installation environments.

Table 8-19. MicroNet XT Analog I/O FTM Part Numbers

Description	Part Number
MicroNet XT AIO FTM – Screw Terminals	5466-5010
MicroNet XT AIO FTM – Spring Terminals	5466-5011

Released

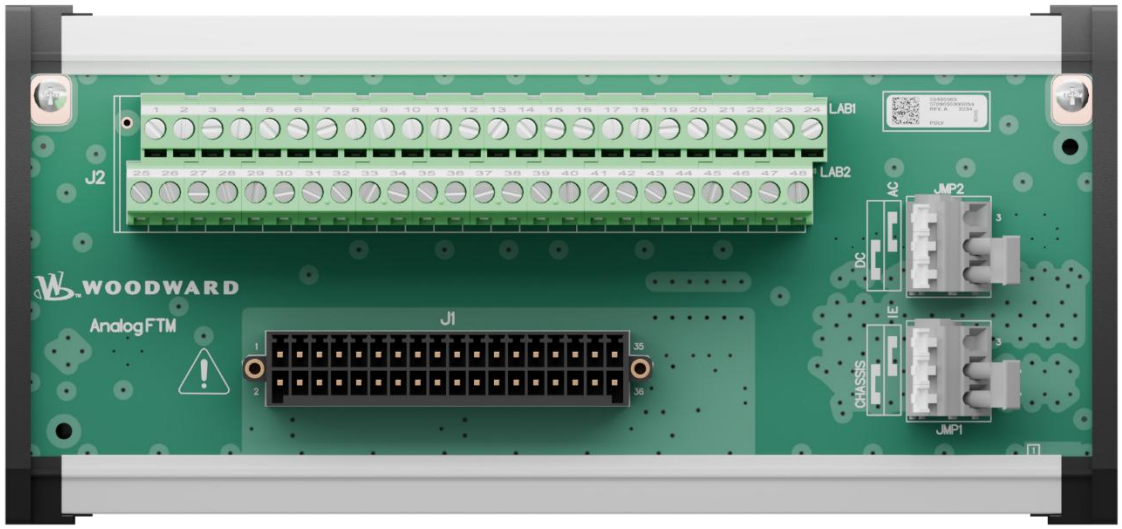

Figure 8-29. Analog FTM with Screw Type Terminals

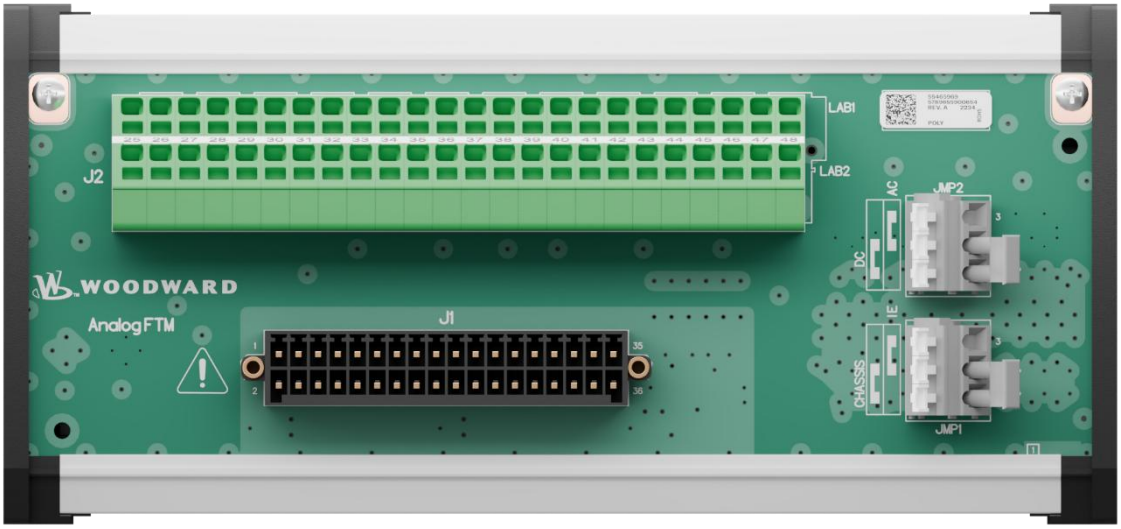

Figure 8-30. Analog FTM with Spring Type Terminals

Each FTM is connected to its corresponding I/O module by means of an FTM cable. To accommodate different installation requirements, the FTM cable is available in multiple lengths. This flexibility allows for optimal positioning of the FTMs within the control cabinet, making installation and maintenance easier regardless of cabinet size or layout.

Table 8-20. MicroNet XT Analog I/O FTM Cable Part Numbers

Length	Part Number
6ft (1.8m)	5417-2106.6
8ft (2.4m)	5417-2106.8
10ft (3m)	5417-2106.10
12ft (3.6m)	5417-2106.12
14ft (4.3m)	5417-2106.14
16ft (4.9m)	5417-2106.16
18ft (5.5m)	5417-2106.18
20ft (6.1m)	5417-2106.20

Released



Figure 8-31. Black Analog FTM Cable

To ensure proper connection and reliable operation of the FTMs, it is essential to prepare the field wiring correctly before installation. Begin by stripping the insulation from the end of the wire, removing between 0.24 and 0.28 inches (6 to 7 millimeters) to expose the conductor. This preparation allows the wire to fit securely into the terminal and make good electrical contact.

The FTMs are designed to accommodate the wire sizes specified in Table 8-21. It is the responsibility of the customer to select appropriate field wiring in accordance with local electrical code regulations to ensure compliance and safety during installation and operation.

For FTMs equipped with screw-type terminals, it is important to secure the connection by tightening the screw to a torque value between 4.4 lbf-in and 5.3 lbf-in (0.5 Nm to 0.6 Nm). Applying the correct torque helps maintain a stable and secure electrical connection, reducing the risk of loose wiring or terminal damage.

Table 8-21. FTM Wire Gauges

Wire Types	AWG		mm^2	
	Min	Max	Min	Max
Stranded Wire	24	12	0.2	2.5
Solid Conductor	24	12	0.2	4
Ferruled Stranded Wire	24	14	0.25	2.5

The AIO 16/8 module FTM pinouts for the analog inputs and outputs are shown in Figure 8-32.

Released

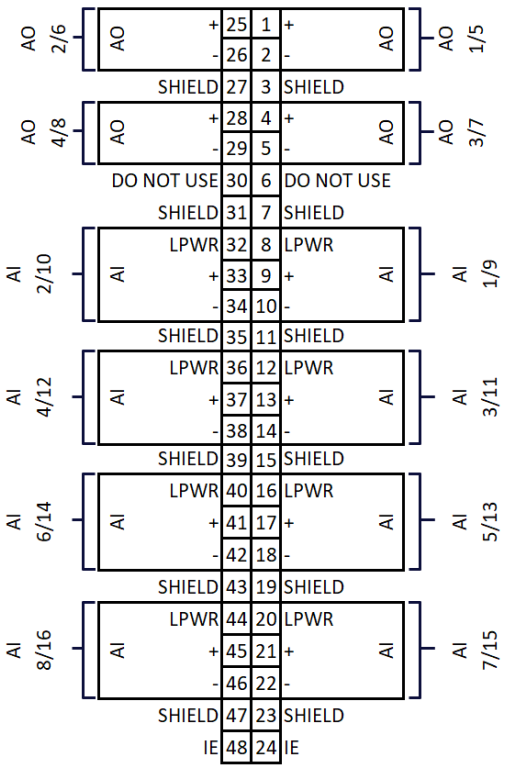

Figure 8-32. FTM Wiring for the AIO 16/8 Module

The FTM provides four distinct options for grounding shield drain wires. This flexibility is achieved using two configuration jumpers, labeled JMP1 and JMP2, located on each FTM. For best all-around EMC performance, Woodward recommends the default jumper settings.

8.2.5. JMP1: Ground Selection

JMP1 determines whether the shield drain wires are connected to the cabinet ground or to an isolated ground known as Instrument Earth (IE). By default, JMP1 is set to connect shields to the cabinet ground, which is established via the DIN rail. The FTMs achieve grounding to the DIN rail through metal DIN rail clips attached to the module base.

- Cabinet Ground: To tie the shields directly to the cabinet ground, place the jumper in the “CHASSIS” position of JMP1.
- Instrument Earth (IE): For installations that require a separate isolated ground for field wiring, move the jumper to the “IE” position. The IE grounding wire should then be terminated at terminals 24 or 48, as indicated in Figure 8-32.

The factory default configuration for JMP1 is the “CHASSIS” position, connecting shield drain wires to the cabinet ground.

8.2.6. JMP2: Direct or Capacitive Coupling

JMP2 allows further customization by configuring whether the shields are directly shorted to the selected ground or capacitively coupled to it. The shields can be:

- Directly Shorted (DC Coupling): In this mode, the shield is directly connected to either cabinet ground or IE, depending on the JMP1 setting. This is the factory default position for JMP2.
- Capacitively Coupled (AC Coupling): To enable AC coupling, place the jumper in the “AC” position of JMP2. This configuration couples the shield to ground through a capacitor, providing an alternative grounding method if required by the installation.

By default, JMP2 is set for direct coupling (“DC”) to ground from the factory.

Released

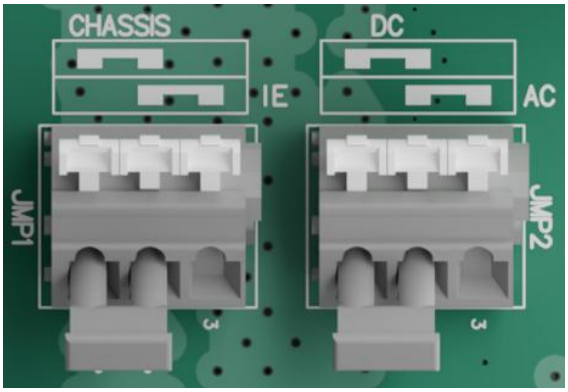

Figure 8-33. FTM Shield Grounding Configuration Jumpers

8.2.7. Field Wiring

Figure 8-34 and Figure 8-35 show wiring examples for self-powered and loop powered analog inputs.

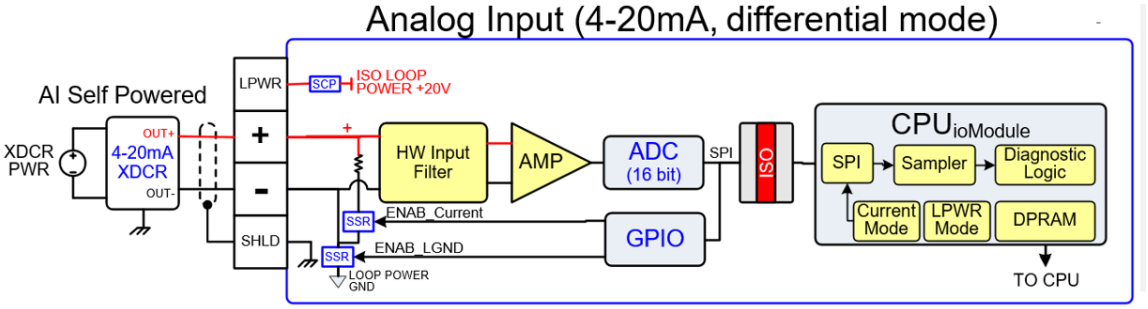

Figure 8-34. Analog Input – Self-Powered Block Diagram

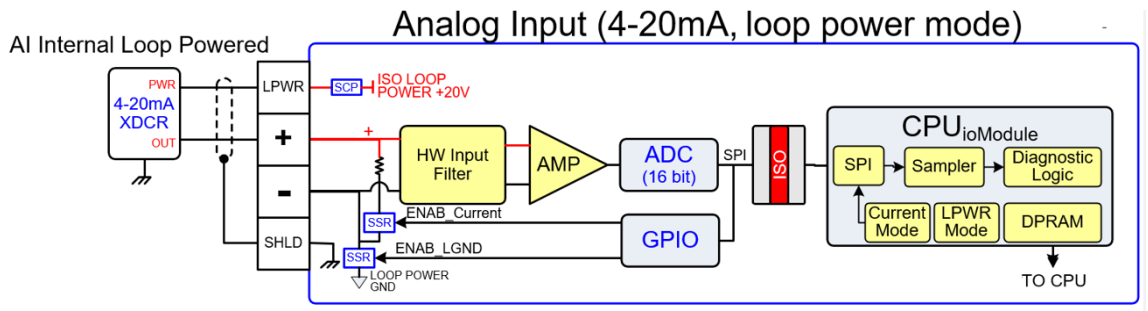

Figure 8-35. Analog Input – Loop-Powered Block Diagram

Figure 8-36 shows the voltage input wiring diagram for A16/8.

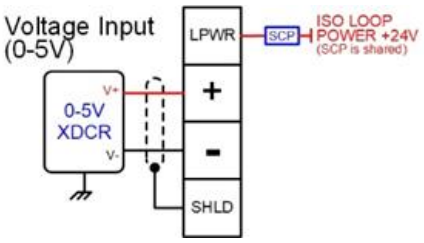

Figure 8-36. A16/8 Voltage Input Wiring Diagram

Released

Figure 8-37 shows a wiring example for the analog outputs.

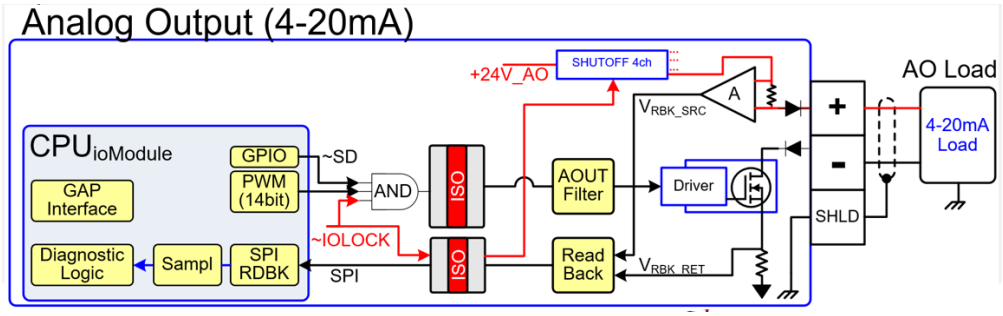

Figure 8-37. Analog Output Block Diagram

8.2.8. Troubleshooting

Each module contains a status LED that can illuminate GREEN or RED, to annunciate the module health.

A green LED indicates the module is healthy and operational.
A red LED indicates the module is in IOLOCK, initializing, in HALT mode, or has a fault.

During initialization of the module, (after every CPU reset), the status LED turns red. The CPU then tests each I/O module. If the diagnostic test is not passed, the status LED remains red and/or blinks, otherwise, the status LED turns green. If the status LED remains red, the module may be located in the wrong slot, be held in IOLOCK or HALT mode by the CPU, or be faulty.

8.2.8.1. Flash Code Table

Flash codes are comprised of up to two numbers and are shown in Table 8-22. Each number is denoted by 0.25 second flashes and pauses, with one second pauses between the two numbers and a three second pause before the code repeats. Flash code definitions are module specific. Definitions for the AIO 16/8 module are in Table 8-22.

Released

Table 8-22. AIO 16/8 LED Indications of Failure

	Flash Code	Failure
Main Application	1, 2	Tick Slip Fault
	1, 3	MFT Timing Fault
	1, 4	Rate Group Key Fault
	1, 5	IPD MFT or IPD RG Timing Fault
	1, 6	OPD MFT of OPD RG Timing Fault
	1, 7	Background Slip Fault
	1, 8	Watchdog Fault
	1, 9	GAP Application Requested Fault
	2, 1	Parameter Fault
	2, 2	Parameter Version Fault
	2, 3	SPI Timing Fault
	2, 4	Non-volatile Memory (read/write) Fault
	2, 6	Digital Core Power Supply Fault
	2, 7	Software Fault
	2, 8	Software Initialization Fault
	2, 9	Software Exception
	2, 10	CPU Fault
	2, 11	Invalid Application Part Number
	2, 12	Invalid Application Revision
	2, 13	Invalid FPGA Part Number
	2, 14	Invalid FPGA Revision
	2, 15	HSSL Communication Fault
Bootloader	3, 1	Invalid Application Image
	3, 2	Invalid FPGA Image
	3, 3	Invalid Bootstrap Images
	3, 4	FPGA Startup Failed
	3, 5	Startup Handshake Not Acknowledged.
	4, 1	System Clocks Initialization Error
	4, 2	Internal MCU Flash Memory Error
	4, 3	External SPI Flash Memory Error
	4, 4	MCU Exception Detected
	4, 5	Internal MCU RAM Memory Error
	4, 6	MCU Initialization Error
	4, 7	SMU Initialization Error
	4, 8	SMU Activation Error
	4, 9	Runtime Recovery Failed
	4, 10	NULL-pointer Dereference
	4, 11	Destructive Unlock Failed
	4, 12	Flash Loader Initialization Failed
	4, 13	Invalid Bootloader Part Number
	4, 14	Invalid Hardware ID
	4, 15	Invalid Bootloader Revision
Bootstrap	5, 1	System Clocks Initialization Error
	5, 2	Internal MCU Flash Memory Error
	5, 3	External SPI Flash Memory Error
	5, 4	HSSL Communication Error
	5, 5	MCU Exception Detected
	5, 6	MCU Initialization Error
	5, 7	Module Slot Initialization Failed
	5, 8	Flash Loader Initialization Failed
	5, 9	Invalid Bootstrap Part Number
	5, 10	Invalid Bootstrap Revision
	5, 11	Invalid FPGA Part Number
	5, 12	Invalid FPGA Revision

Detailed fault descriptions for flash codes can be obtained in AppManager.

Released

8.2.8.2. Fault Detection

In addition to detecting MicroNet XT AIO 16/8 Module hardware faults, the application software may detect I/O channel faults.

Analog I/O Faults: The module monitors the I/O control voltage and annunciates faults. The application software determines the course of action in the event of a fault.

Microcontroller Faults: The system monitors a software watchdog, a hardware watchdog, and a software watchdog on the bus communications. All outputs are shut down in the event of a microcontroller fault.

If during normal control operation all of the I/O module status LEDs are red, check the CPU module for a failure. When a module fault is detected, its outputs will be disabled or de-energized.

8.2.8.3. Troubleshooting Guide

If during normal control operation, all of the I/O modules status LEDs are red, check the CPU module for a failure. Check the CPU module for a fault or an IOLOCK condition. The IOLOCK status could be caused by the application being in configuration mode or the CPU having no application in run mode.

If during normal control operation only the AIO 16/8 module's status LED is red or flashing red, ensure that it is installed in the correct slot. If it is, then replace that module. See instructions for replacement in Chapter 10 Installation (System Level Installation). When a module fault is detected, its outputs will be disabled or de-energized.

8.2.8.3.1. Analog Inputs

If an analog input is not functioning properly, verify the following:

- Check the application software configuration to ensure that the input is configured properly.
- Verify or perform the channel calibration in the GAP application.
- Check that the cable is shielded and the shield is properly grounded per the Shields and Grounding section in Chapter 10.
- If all of the inputs are reading high, check that the 24 VDC is not connected across the input directly.
- Check the wiring. If the inputs are reading 0 or the engineering units that correspond to 0 mA, look for a loose connection on the terminal blocks, disconnected or misconnected cables, etc.
- Measure the input voltage on the terminal block. It should be in the range of 0-5 V.
- Verify that the input terminals are not shorted to PS(+), PS(–), EARTH.
- Verify that the input terminals are not shorted to another channel.
- Verify that there are no or minimal AC components to the Analog Input signal. Improper shielding may introduce AC noise on the input terminals.
- After verifying all of the above, if FTMs are used, exchange the J1 and J2 cables. If the problem moves to a different channel, replace the cable. If not, replace the module.
- If the readings are incorrect on several channels of the module, corresponding to both connectors or cables, replace the module.
- If replacing the module does not fix the problem and an FTM is used, replace the FTM. The FTM contains only traces and a few discrete components, so failure is extremely unlikely. See instructions for replacing the FTM in Chapter 10.

AI (Non-loop), Analog Inputs

- Verify that external powered transducers are NOT used with these self-powered channels.
- Functionally verify the wiring for each AI channel using a simulator source.

AI (Loop Power), Analog Inputs

- Verify that external transducers are connected to these channels.
- Verify the LPWR voltage level (+20 VDC) is correct for the transducer.
- Verify each LPWR(+) terminal is wired to the transducer POWER(+).

8.2.8.3.2. Analog Outputs

If an analog output is not functioning properly, verify the following:

- Check the application software configuration to ensure that the input is configured properly.
- Verify or perform the channel calibration in the GAP application.

Released

- Check that the cable is shielded and the shield is properly grounded per the Shields and Grounding section in Chapter 10.
- Disconnect the field wiring and connect a resistor across the output. Verify correct output current with a meter. Verify the correct SRC_RDBK & RET_RDBK values in GAP. If the output is correct across the resistor, there is a problem with the field wiring.
- Check the load resistance to ensure that it is not greater than 600 ohms.
- Check to ensure that the load wiring is isolated.
  - Verify each AO(+,–) is not shorted to another output channel.
  - Verify each AO(+,–) is not shorted to another analog input channel.
  - Verify each AO(+) terminal is not shorted to PS(+), PS(–), EARTH.
  - Verify each AO(–) terminal is not shorted to PS(+), PS(–), EARTH.
- After verifying all of the above, if FTMs are used, exchange the J1 and J2 cables. If the problem moves to a different channel, replace the cable. If not, replace the module.
- If the readings are incorrect on several channels of the module, corresponding to both connectors or cables, replace the module.
- If replacing the module does not fix the problem and an FTM is used, replace the FTM. The FTM contains only traces and a few discrete components, so failure is extremely unlikely. See instructions for replacing the FTM in Chapter 10.

Note that removing the cover on any module will void the warranty.

IMPORTANT

Recommendation:
The module should be returned to Woodward every 6 years for health check and technical updates. This health check shall increase in frequency when the module is more than 20 years old.

Released

8.3. RTD/TC 12 Module

The RTD/TC 12 module provides 12 inputs channels that are GAP configurable for either RTD or thermocouple (TC) mode. Each channel has a built-in thermocouple cold junction temperature sensor.

Firmware upgrade can be performed using Service Pack installation via AppManager.

These modules require no calibration. A module may be replaced with another module of the same part number without any adjustment.



Figure 8-38. RTD/TC 12 Module

Released

8.3.1. RTD Specifications

Table 8-23. RTD/TC 12 Module RTD Input Specifications

Number of Channels	12 channels, max
Input Range	(0 to 600) Ω
Input RTD Type	100 Ω, 200 Ω (2 & 3 wire, European & American curves)
Engineering Units	°C, °F, or ohms (default = °C)
Channel Isolation	0 V channel to channel within channel groups 1-6 or 7-12 500 Vrms to channels in other group, chassis, input power, other modules
Anti-aliasing Filter	2 poles at 10 ms
RTD Excitation Current	1 mA
Hardware Filter	2 poles @ ~10 ms
Accuracy Signal Range	–100 °C to upper curve limit
Accuracy (@ 25 °C)	±1 °C
Accuracy (–40 °C, +70 °C)	±2 °C
Resolution	< 0.1 °C (~15 bits)
CMRR Over Temp	> 86 dB @ 50/60 Hz, 140 dB typical
CMVR	±10 VDC to internal circuit ground
Miswire Protection	reverse polarity, short-circuit to chassis / each other
Over-voltage Protection	± 32 VDC

RTD Range Limits (Ω and °C)

Table 8-24. RTD/TC 12 Module RTD Curve Limits

RTD Type	$Spec_{Lohms}$	$Spec_{Uohms}$	$Spec_{LDegC}$	$Spec_{UDegC}$
100 Ω, E	18.52	390.48	-200	850
100 Ω, A	17.00	396.30	-200	850
200 Ω, E	37.04	594.97	-200	550
200 Ω, A	33.99	602.81	-200	550

RTD Curve Types

Table 8-25. RTD/TC 12 Module RTD Curve Types

European Curve (100 EU, 200 EU)	American Curve (100 US, 200 US)
per IEC 60751 spec	per ITS-90 update
R0 =100 Ω or 200 Ω platinum	R0 =100 Ω or 200 Ω platinum
coeff_A=3.9083E-3, coeff_B=-5.775E-7	coeff_A=3.9848E-3, coeff_B=-5.8700E-7
coeff_C=-4.183E-12	coeff_C=-4.0000E-12
resulting ALPHA coefficient is 0.003850	resulting ALPHA coefficient is 0.003920

8.3.2. Thermocouple Specifications

Table 8-26. RTD/TC 12 Module Thermocouple Input Specifications

Number of Channels	12 channels, max
Input TC Types	K, J, T, and mV (per NIST Monograph 175, ITS-90)
Engineering Units	°C, °F, or mV (default = °C)
Channel Isolation	0 V channel to channel within channel groups 1-6 or 7-12 500 Vrms to channels in other group, chassis, input power, other modules
Anti-aliasing Filter	2 poles at 10 ms
Accuracy (–40, +70 °C)	See tables below
High Accuracy Signal Range	+200 °C to 900 °C

Released

High Accuracy (–20 °C, +70 °C)	±1.5 °C with on board CJ for signal range between +200 °C to +900 °C
Standard Accuracy (–40 °C, +70 °C)	±5 °C with on board CJ for signal range from -100 °C to the upper curve limit
CJ Sensors	Each channel has a dedicated CJ sensor
Resolution	< 0.1 °C (~15 bits)
Hardware Filter	2 poles @ ~10 ms
CMRR Over Temp	> 86 dB @ 50/60 Hz, 110 dB typical
CMVR	±10 VDC to DGND, ±110 VDC to chassis
Miswire Protection	reverse polarity, short-circuit to chassis / each other
Over-Voltage Protection	±32 VDC
Cold Junction	Automatic CJ compensation included on board, or external cold junction can be used in GAP

Thermocouple Range Limits (mV, °C)

Released

Table 8-27. RTD/TC 12 Module Thermocouple Range Limits

TC Type	$Spec_{LMV}$	$Spec_{UMV}$	$Spec_{LDegC}$	$Spec_{UDegC}$
Type K	–6.458	54.886	–270	1372
Type J	–8.095	69.553	–210	1200
Type T	–6.258	20.872	–270	400

A functional block diagram of the module is shown in Figure 8-39.

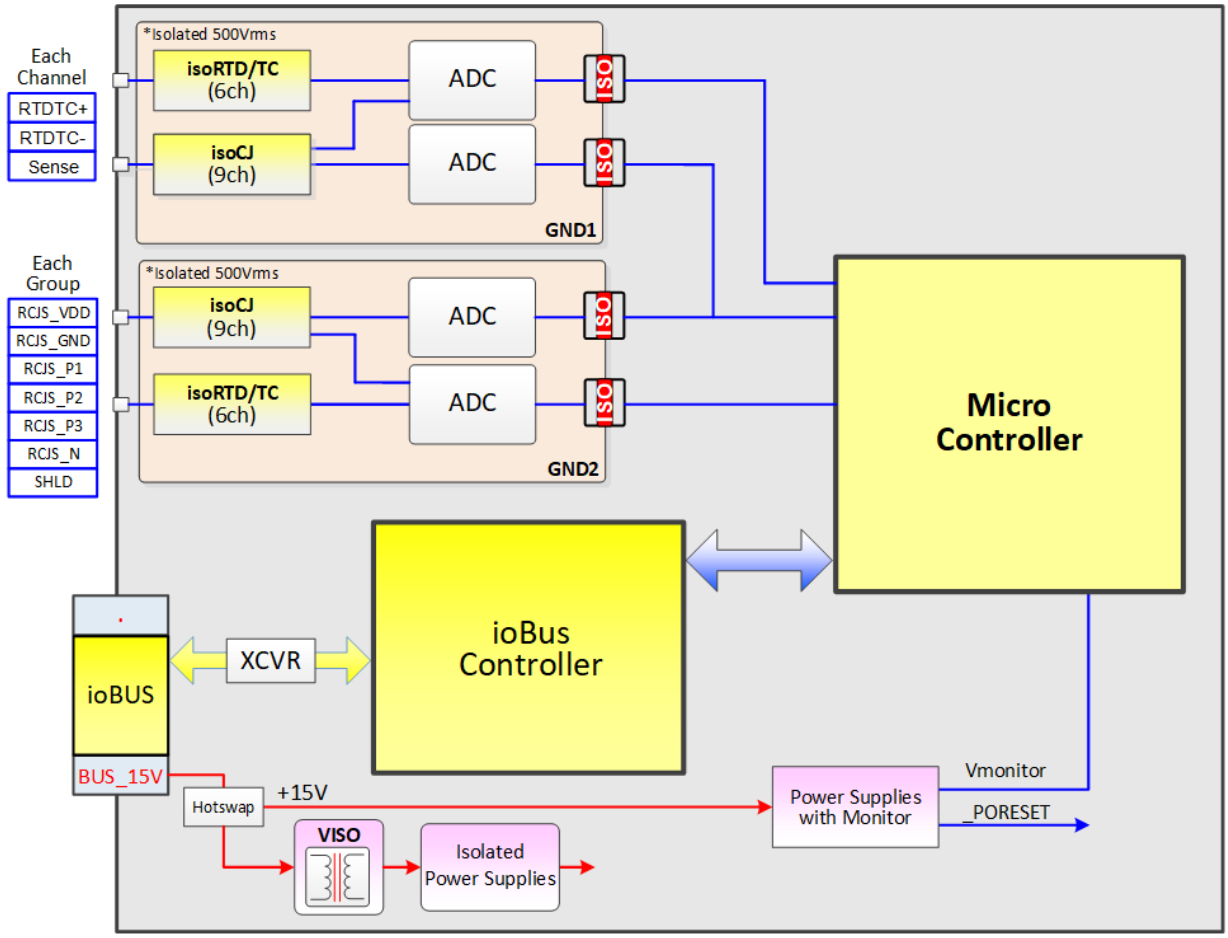

Figure 8-39. RTD/TC 12 Module Block Diagram

Released

8.3.3. Installation

The RTD/TC 12 modules slide into card guides in the control's chassis and plug into the backplane. They are secured with screws at the top and bottom. Each mounting screw should be torqued to 6 Nm (53 lb-in) but can also be hand-tightened.

NOTICE

Backplane Connector Pins

To prevent damage to the backplane connector pins, the shipping connector cover should not be removed until the module is ready to be inserted into the control's chassis. Care should be given when handling the module without the shipping connector cover to avoid broken or bent pins. Make sure the module is aligned in the chassis module guides before fully seating the module.

All the module inputs are accessible on the connectors on the front of the module or on the FTMs, and the channels are labeled to correspond to their designation in the application software (input one on the module will be input one in the application software). Terminal blocks have the ability to be keyed by the end user if required.

All RTD inputs must be shielded twisted triad wiring. All T/C inputs must be shielded, twisted pair wiring.

8.3.3.1. Configuration Notes:

8.3.3.1.1. RTD Inputs

All twelve analog input channels can be configured as RTD input. See Figure 8-51 for RTD input connection. The RTD type (100 or 200 Ohm) and curve type (American or European) are configured in software. When a channel fault or a module fault is detected, the application program may annunciate the fault, disable the channel, and stop using data in system calculations or control.

NOTICE

Intentional or unintentional grounding, also called "EARTHING", of the RTD sensor may reduce the accuracy of the inputs due to ground loop noise flowing in the wiring. In general, common mode noise riding on the earth ground will degrade performance, depending on the noise present, up to damaging them. EARTHING, intentional or unintentional, provides a path for transients (ground bounce transient currents) or RF noise to flow through the input, either from or to the remote earthing connection. The RTD and TC inputs are designed to survive a limited level of transient noise with intentional or unintentional grounding, or EARTHING, of the inputs. This is limited to transient pulses, as defined in the surge specification IEC 61000-4-5, of ±1 kV with respect to the remote ground injected into the local chassis ground, using shielded cable.

Released

NOTICE

If the RTD sensor grounding is intentionally used, maintaining short RTD cable lengths is recommended. This will aid in reducing the effect of ground loop noise and limit the transient voltage potential that may be developed. The recommended distance is less than 10 up to 30 m separation, for the furthest two separated points in the sub-system. Placing one set of earthed sensors at 30 m from the node and another set of earthed sensors 30 m in the opposite direction is an example of a violation. Therefore, the shortest straight line distance between the grounded sensors of 60 m is a violation of this recommendation.

Determining acceptability of deviations due to ground noise is deterministic. Earth noise due to large currents or voltages may be present, depending on the location in the system.

Determining acceptability of transient noise may be due to indirect lightning strikes and is determined by the level of building structure that is provided for shelter and continuity (conductivity) of the earthing system, voltage peak = Current peak * ground resistance. In the case of a motor transient the peak current may be a few hundred amps, in the case of lightening transients this may be up to ~200,000 amps. With a ±1000 V limited design and a 200 kA transient, the earth ground impedance must be less than 5 milliohms.

NOTICE

Mixing of earth grounded and non-earth grounded RTD or TC sensors in the same module will degrade the performance of all sensor inputs; however, length limitations only apply to the straight line distances from the grounded sensors to the nodes or to each other, whichever is further.

NOTICE

Channel to channel isolation is limited, unused inputs should be shorted at the node terminal blocks to provide known values and limit spurious noise from coupling to the unused inputs and propagating.

8.3.3.1.2. Thermocouple Inputs

All twelve analog input channels can be configured as Thermocouple inputs. See Figure 8-52 for thermocouple input connection. The thermocouple type is configured in software.

The module contains individual cold junction (CJ) compensation sensors for each of the 12 channels to support directly wiring T/C sensors to the module. If the wiring material transition is somewhere else, a sensor to provide the control with the temperature at that junction will need to be provided to the control. In the application, there are tunable settings for configuring the control as to where the CJ compensation is being done. The options are: Local on Module, Local on FTM, or External (Remote). Use the External (Remote) option when the material transition is made somewhere other than on the module or FTM and you have a cold junction sensor at the transition point. The remote cold junction sensor will consume an additional thermocouple channel in the system. Refer to the GAP help on how to configure thermocouple channel as a remote cold junction.

When a channel fault or a module fault is detected, the application program may annunciate the fault, disable the channel, and stop using data in system calculations or control. The T/C channel can be configured to either fail high or low in the application program.

Released

8.3.4. Module Wiring

I/O Module Connectors for Direct Wiring

The RTD/TC 12 module has two connection points for signal wiring, labeled J1 (top) and J2 (bottom). Each connection point will accept either a terminal block plug for directly wiring to the module or an FTM cable connector end for wiring remotely using an FTM. For the direct wiring option, the connector plugs for J1 are labeled with terminal numbers 1-36, J2 connector plugs are labeled with terminal numbers 37-72. J1 and J2 connectors may be keyed differently, so that they will only fit in the correct position on the module. When attaching the connectors or FTM cables to the I/O module, securely tighten the flange screws on both sides to prevent the connectors from accidentally coming loose. Figure 8-40 shows an RTD/TC 12 module field wiring connector.



Figure 8-40. RTD/TC 12 Module Connector

Each connector plug is equipped with an integrated strain relief tab. The strain relief tab can be removed if desired by sliding it down the center line of the connector. Wiring can be secured to the strain relief tab by running zip ties through the provided holes in the tab.

When prepping wire for the connectors, strip the insulation back 0.24-0.28 in (6-7 mm) from the end. The connector will accept the wire sizes outlined in Table 8-28. Note that field wiring should be selected by the customer based on local electrical code regulations.

Table 8-28. RTD/TC 12 Module Connector Wire Gauges

Wire Type	AWG		mm^2	
	Min	Max	Min	Max
Stranded Wire	22	16	0.34	1.5
Solid Conductor	22	16	0.34	1.5
Ferruled Stranded Wire	24	18	0.14	1

Each I/O module ships with a special nylon tool to assist with wiring the connectors, see Figure 8-41. The connectors have spring loaded terminals. To insert a wire into the connector, slide the long end of the tool along the exposed spring on the side of the connector, pressing down firmly. The tool will lock into place and lock the terminal open when the tool is fully inserted into the connector, see Figure 8-42. Caution: Do not try to actuate the terminal spring by prying the tool against the connector, this may lead to damaging the connector or the tool. With the tool fully inserted, the terminal will be opened allowing the wire to be inserted into the hole. To secure the wire, remove the tool from the connector. Be careful to not let the

Released

spring terminal close on the wire insulation. If needed, a screwdriver with a maximum 2.5 x 0.4mm blade may be used in place of the supplied tool.



Figure 8-41. Special Nylon Wiring Tool



Figure 8-42. Connector Tool Operation

To troubleshoot or check terminated wiring, the exposed metal springs can be used as probing test points.

Additionally, each I/O module also ships with coding elements. Coding is optional and allows the customer to key each connector uniquely so that they cannot be plugged into the wrong module position, both between J1 and J2 and across modules. There are two steps to keying a connector. The first step is to select one or more locating tabs on the bottom of the terminal on the connector plug and snip it off as shown in Figure 8-43. Then insert the coding elements into the matching terminal slots of the mating connector on the module and break them off the holding tool as shown in Figure 8-44. It is suggested to have a unique keying combination for each connector in the system.

Released

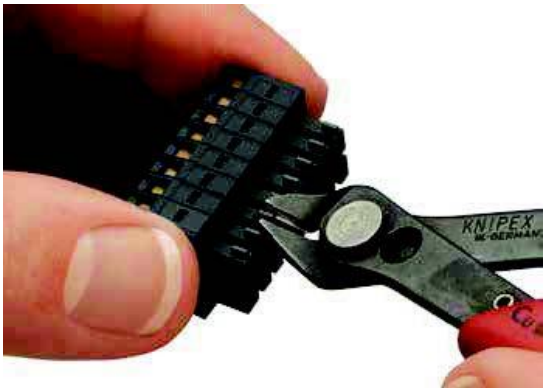

Figure 8-43. Removing Connector Plug Keying Tab

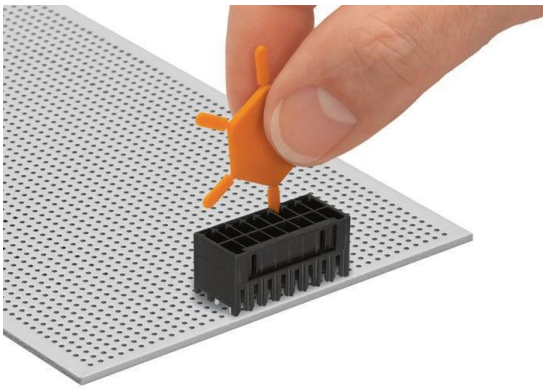

Figure 8-44. Inserting the Keying Element into the Module Connector

Released

The MicroNet XT RTD/TC 12 module connector pinouts are shown in Figure 8-45.

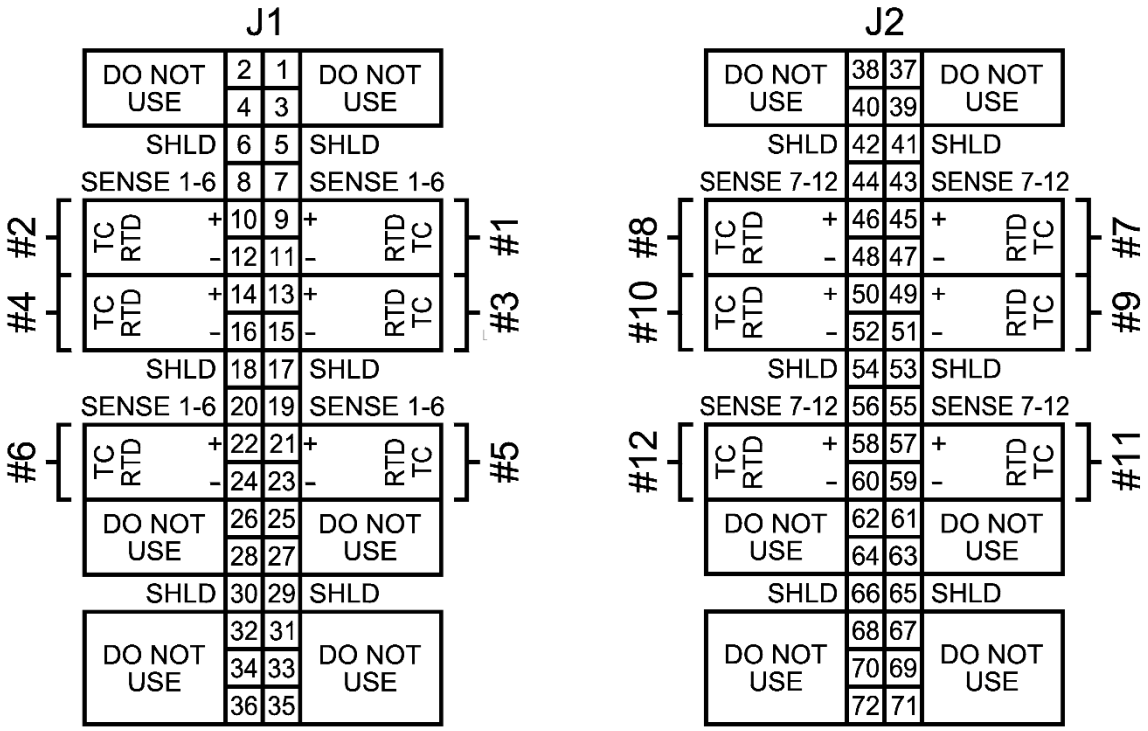

Figure 8-45. RTD/TC 12 Module Connector Pinouts

8.3.4.1. FTM Modules for Remote Wiring

The Analog FTM offers an alternative to the standard front module connector plugs when remote wiring is required. This provides flexibility in system installation and configuration. Importantly, the same I/O module part number can be utilized for both direct wiring and FTM wiring options, allowing for seamless integration and easy adaptation to various wiring preferences.

A mixed wiring approach is supported, meaning that direct wiring and FTMs can be used together within the same system. Each connector found on the I/O module is designed to accommodate an FTM, with one FTM assigned per module connector.

To further enhance installation reliability, FTMs support connector coding. This feature is optional but recommended, as it prevents the accidental crossing of cables between the I/O module connectors or FTMs. For guidance on applying connector and cable coding inserts, refer to the direct wiring section, which provides detailed instructions for proper coding procedures.

The module is designed to work with both the basic analog FTM and the analog FTM equipped with Remote Cold Junction Sensors (RCJS). The selection of the appropriate FTM depends on the specific requirements of the installation. If any of the analog input channels are set up to function as thermocouple inputs, it is necessary to use an analog FTM that includes remote cold junction sensors. This ensures accurate temperature measurement and compensation for thermocouple applications.

For each type of FTM—whether standard or with RCJS—there are two available configurations to accommodate different installation preferences. Users can choose between screw terminal blocks and spring terminal blocks. This flexibility allows for easier adaptation to various wiring practices and installation environments.

Released

Table 8-29. MicroNet XT Analog I/O FTM Part Numbers

Description	Part Number
MicroNet XT AIO FTM – Screw Terminals	5466-5010
MicroNet XT AIO FTM – Spring Terminals	5466-5011
MicroNet XT AIO with RCJS FTM – Screw Terminals	5466-5012
MicroNet XT AIO with RCJS FTM – Spring Terminals	5466-5013

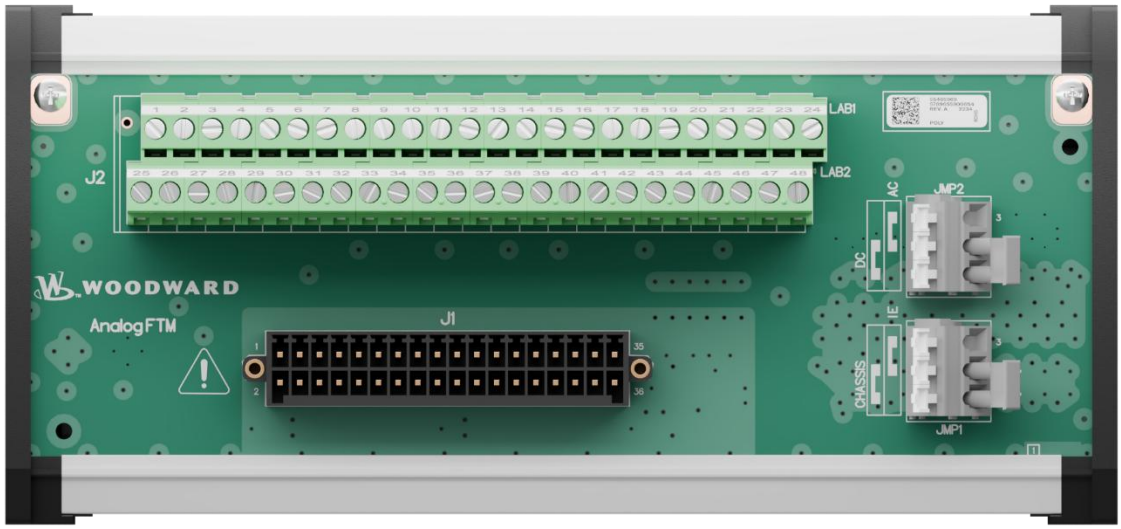

Figure 8-46. Analog FTM with Screw Type Terminals

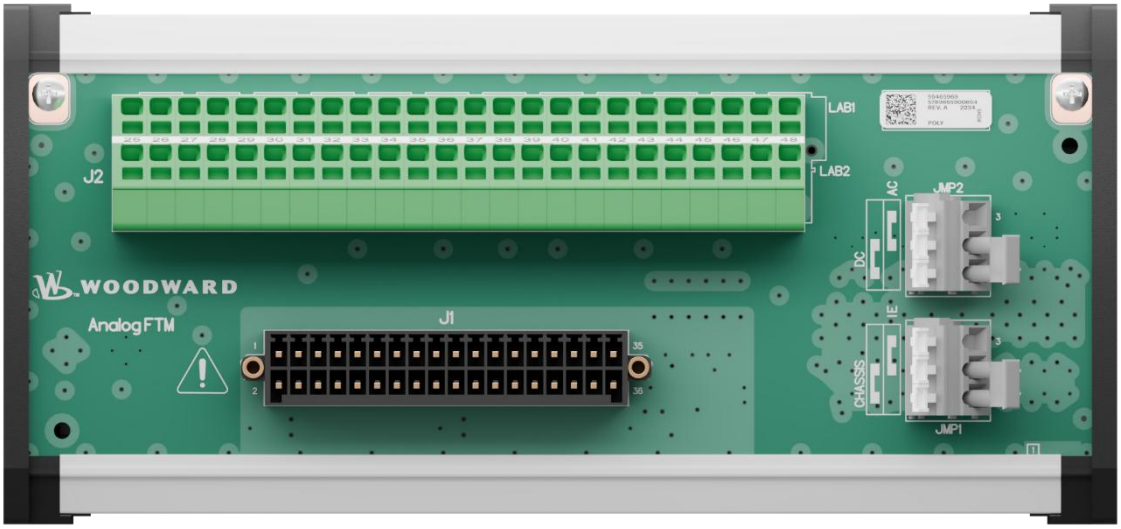

Figure 8-47. Analog FTM with Spring Type Terminals

Each FTM is connected to its corresponding I/O module by means of an FTM cable. To accommodate different installation requirements, the FTM cable is available in multiple lengths. This flexibility allows for optimal positioning of the FTMs within the control cabinet, making installation and maintenance easier regardless of cabinet size or layout.

Released

Table 8-30. MicroNet XT Analog I/O FTM Cable Part Numbers

Length	Part Number
6ft (1.8m)	5417-2106.6
8ft (2.4m)	5417-2106.8
10ft (3m)	5417-2106.10
12ft (3.6m)	5417-2106.12
14ft (4.3m)	5417-2106.14
16ft (4.9m)	5417-2106.16
18ft (5.5m)	5417-2106.18
20ft (6.1m)	5417-2106.20



Figure 8-48. Black Analog FTM Cable

To ensure proper connection and reliable operation of the FTMs, it is essential to prepare the field wiring correctly before installation. Begin by stripping the insulation from the end of the wire, removing between 0.24 and 0.28 inches (6 to 7 millimeters) to expose the conductor. This preparation allows the wire to fit securely into the terminal and make good electrical contact.

The FTMs are designed to accommodate the wire sizes specified in Table 8-31. It is the responsibility of the customer to select appropriate field wiring in accordance with local electrical code regulations to ensure compliance and safety during installation and operation.

For FTMs equipped with screw-type terminals, it is important to secure the connection by tightening the screw to a torque value between 4.4 lbf-in and 5.3 lbf-in (0.5 Nm to 0.6 Nm). Applying the correct torque helps maintain a stable and secure electrical connection, reducing the risk of loose wiring or terminal damage.

Table 8-31. FTM Wire Gauges

Wire Types	AWG		mm^2	
	Min	Max	Min	Max
Stranded Wire	24	12	0.2	2.5
Solid Conductor	24	12	0.2	4
Ferruled Stranded Wire	24	14	0.25	2.5

Released

The RTD/TC 12 module FTM pinouts for the analog inputs are shown in Figure 8-49.

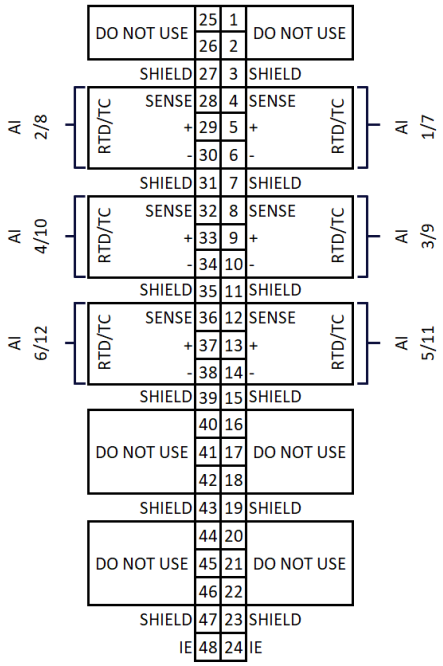

Figure 8-49. FTM Wiring for the RTD/TC 12 Module

The FTM provides four distinct options for grounding shield drain wires. This flexibility is achieved using two configuration jumpers, labeled JMP1 and JMP2, located on each FTM. For best all-around EMC performance, Woodward recommends the default jumper settings.

8.3.5. JMP1: Ground Selection

JMP1 determines whether the shield drain wires are connected to the cabinet ground or to an isolated ground known as Instrument Earth (IE). By default, JMP1 is set to connect shields to the cabinet ground, which is established via the DIN rail. The FTMs achieve grounding to the DIN rail through metal DIN rail clips attached to the module base.

- Cabinet Ground: To tie the shields directly to the cabinet ground, place the jumper in the “CHASSIS” position of JMP1.
- Instrument Earth (IE): For installations that require a separate isolated ground for field wiring, move the jumper to the “IE” position. The IE grounding wire should then be terminated at terminals 24 or 48, as indicated in Figure 8-49.

The factory default configuration for JMP1 is the “CHASSIS” position, connecting shield drain wires to the cabinet ground.

8.3.6. JMP2: Direct or Capacitive Coupling

JMP2 allows further customization by configuring whether the shields are directly shorted to the selected ground or capacitively coupled to it. The shields can be:

- Directly Shorted (DC Coupling): In this mode, the shield is directly connected to either cabinet ground or IE, depending on the JMP1 setting. This is the factory default position for JMP2.
- Capacitively Coupled (AC Coupling): To enable AC coupling, place the jumper in the “AC” position of JMP2. This configuration couples the shield to ground through a capacitor, providing an alternative grounding method if required by the installation.

By default, JMP2 is set for direct coupling (“DC”) to ground from the factory.

Released

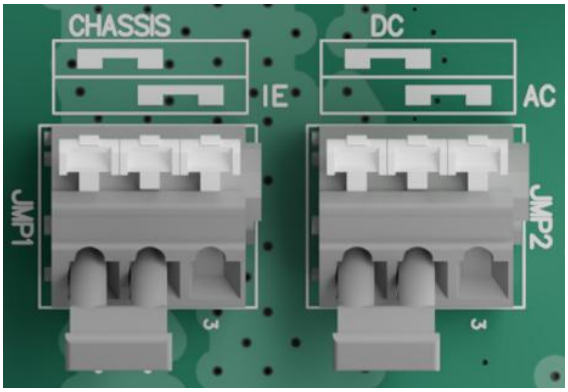

Figure 8-50. FTM Shield Grounding Configuration Jumpers

8.3.7. Field Wiring

Figure 8-51 shows the RTD/TC 12 module wiring for 2 and 3 wire RTD inputs.

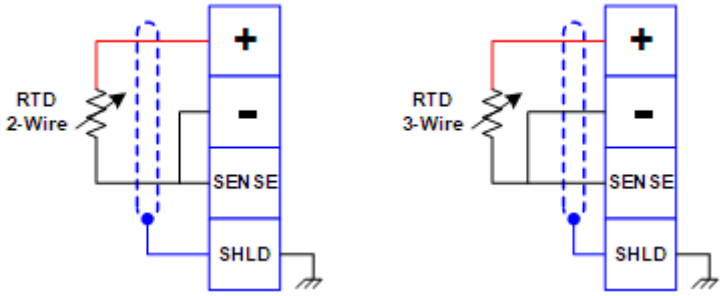

Figure 8-51. 2 and 3 Wire RTD/TC Module RTD Input Wiring

Figure 8-52 shows the RTD/TC 12 module wiring for thermocouple inputs.

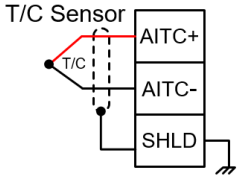

Figure 8-52. RTD/TC 12 Module Thermocouple Input Wiring

8.3.8. Troubleshooting

Each module contains a status LED that can illuminate GREEN or RED, to annunciate the module health.

A green LED indicates the module is healthy and operational.
A red LED indicates the module is in IOLOCK, initializing, in HALT mode, or has a fault.

During initialization of the module, (after every CPU reset), the status LED turns red. The CPU then tests each I/O module. If the diagnostic test is not passed, the status LED remains red and/or blinks, otherwise, the status LED turns green. If the status LED remains red, the module may be located in the wrong slot, be held in IOLOCK or HALT mode by the CPU, or be faulty.

8.3.8.1. Flash Code Table

Flash codes are comprised of up to two numbers and are shown in Table 8-15. Each number is denoted by 0.25 second flashes and pauses, with one second pauses between the two numbers and a three second pause before the code repeats. Flash code definitions are module specific. Definitions for the RTD/TC 12 module are in Table 8-15.

Released

Table 8-32. RTD/TC 12 LED Indications of Failure

	Flash Code	Failure
Main Application	1, 2	Tick Slip Fault
	1, 3	MFT Timing Fault
	1, 4	Rate Group Key Fault
	1, 5	IPD MFT or IPD RG Timing Fault
	1, 6	OPD MFT of OPD RG Timing Fault
	1, 7	Background Slip Fault
	1, 8	Watchdog Fault
	1, 9	GAP Application Requested Fault
	2, 1	Parameter Fault
	2, 2	Parameter Version Fault
	2, 3	SPI Timing Fault
	2, 4	Non-volatile Memory (read/write) Fault
	2, 6	Digital Core Power Supply Fault
	2, 7	Software Fault
	2, 8	Software Initialization Fault
	2, 9	Software Exception
	2, 10	CPU Fault
	2, 11	Invalid Application Part Number
	2, 12	Invalid Application Revision
	2, 13	Invalid FPGA Part Number
	2, 14	Invalid FPGA Revision
	2, 15	HSSL Communication Fault
Bootloader	3, 1	Invalid Application Image
	3, 2	Invalid FPGA Image
	3, 3	Invalid Bootstrap Images
	3, 4	FPGA Startup Failed
	3, 5	Startup Handshake Not Acknowledged.
	4, 1	System Clocks Initialization Error
	4, 2	Internal MCU Flash Memory Error
	4, 3	External SPI Flash Memory Error
	4, 4	MCU Exception Detected
	4, 5	Internal MCU RAM Memory Error
	4, 6	MCU Initialization Error
	4, 7	SMU Initialization Error
	4, 8	SMU Activation Error
	4, 9	Runtime Recovery Failed
	4, 10	NULL-pointer Dereference
	4, 11	Destructive Unlock Failed
	4, 12	Flash Loader Initialization Failed
	4, 13	Invalid Bootloader Part Number
	4, 14	Invalid Hardware ID
	4, 15	Invalid Bootloader Revision
Bootstrap	5, 1	System Clocks Initialization Error
	5, 2	Internal MCU Flash Memory Error
	5, 3	External SPI Flash Memory Error
	5, 4	HSSL Communication Error
	5, 5	MCU Exception Detected
	5, 6	MCU Initialization Error
	5, 7	Module Slot Initialization Failed
	5, 8	Flash Loader Initialization Failed
	5, 9	Invalid Bootstrap Part Number
	5, 10	Invalid Bootstrap Revision
	5, 11	Invalid FPGA Part Number
	5, 12	Invalid FPGA Revision

Detailed fault descriptions for flash codes can be obtained in AppManager.

Released

8.3.8.2. Fault Detection

In addition to detecting MicroNet XT RTD/TC 12 Module hardware faults, the application software may detect I/O channel faults.

Voltage Faults: The module monitors the I/O control voltage and annunciates faults. The application software determines the course of action in the event of a fault.

Microcontroller Faults: The system monitors a software watchdog, a hardware watchdog, and a software watchdog on the bus communications.

8.3.8.3. Troubleshooting Guide

If during normal control operation, all of the I/O modules status LEDs are red, check the chassis' CPU module for a failure. Check the chassis' CPU module for a fault or an IOLOCK condition. The IOLOCK status could be caused by the application being in configuration mode or the CPU having no application in run mode.

If during normal control operation only the RTD/TC 12 module's status LED is red or flashing red, ensure that it is installed in the correct slot. If it is, then replace that module. See instructions for replacement in Chapter 10 Installation (System Level Installation).

All Inputs

If a TC or RTD input is not functioning properly, verify the following:

- Check the application software configuration to ensure that the input is configured properly.
- Verify or perform the channel calibration in the GAP application.
- Check that the cable is shielded and the shield is properly grounded per the Shields and Grounding section in Chapter 10.
- Verify that there are no or minimal AC components to the RTD or TC input signal. Improper shielding may introduce AC noise on the input terminals.
- Measure there is input voltage on the exposed metal springs on the side of the plugs, or on the FTM terminal block. It should be in the range of -10mV to 70mV for thermocouples or 0V to 0.6V for RTDs.
- Check the wiring. If the inputs are reading maximum or minimum temperature, look for a loose connection on the terminal blocks, disconnected or misconnected cables, etc.
- If all of the inputs are reading high, check that the 24 Vdc is not connected across an input directly.
- After verifying all of the above, exchange the J1 and J2 cables. If the problem moves to a different channel, replace the cable. If not, replace the module.
- If the readings are incorrect on several channels of the RTD/TC module, corresponding to both cables, replace the module.
- If replacing the module does not fix the problem and a FTM is used, replace the FTM. The FTM contains only traces and a few discrete components, so failure is extremely unlikely. See instructions for replacing the FTM in) Chapter 10.

TC, Thermocouple Inputs

- Verify no wires are landed accidently on the NC, no-connect terminals.
- Functionally verify the wiring for each TC channel using a simulator source.
- TC OPENS: A TC input will read MAX DegC if the (+) or (–) wire is broken / open.
- TC SHORTS: A TC input will read 0 DegC if the (+) and (–) wires are shorted.

RTD, Inputs

- Verify each RTD(sense) terminal is connected properly for 3-wire sensors.
- Verify each RTD(sense) terminal is jumpered to RTD(–) for 2-wire sensors.
- Functionally verify the wiring for each RTD channel using a simulator source.
- RTD OPENS: RTD channels will read MAX DegC if the (+) or (–) wire is broken.

Note that removing the cover on any module will void the warranty.

Released

IMPORTANT

Recommendation:
The module should be returned to Woodward every 6 years for health check and technical updates. This health check shall increase in frequency when the module is more than 20 years old.

Released

Chapter 9.
Actuator Modules

The MicroNet XT Control supports modules for proportional and integrating actuators. Output currents include 10mA, 25mA, 50mA, 100mA, and 200mA. Feedback devices include LVDT, RVDT, DCDT, or 4-20mA.

Table 9-1. MicroNet XT Actuator Controller Module Part Numbers

Description	Part Number
MicroNet XT ACT CTRL 2	5466-1307

Table 9-2 MicroNet XT I/O Module Connector Kits (Optional)

Description	Part Number
MicroNet XT I/O Module Connector Kit	8923-3201

9.1. Integrating Actuator Controller Module

9.1.1. Module Description

The integrating actuator controller module is a 2 channel module, each channel controls an integrating or proportional, hydro mechanical, or pneumatic actuator. Each actuator may have up to two position feedback devices. The position feedback devices may be LVDTs, RVDTs, DCDTs, or 4-20 mA transducers. The module will allow the customer to access information about the module during operation via AppManager.

Firmware upgrade can be performed using Service Pack installation via AppManager.

These modules require no calibration. A module may be replaced with another module of the same part number without any adjustment.

The module can be wired to directly, or through the analog FTM.

Released



Figure 9-1. Integrating Actuator Controller Module

9.1.2. Specifications

General

Table 9-3. Integrating Actuator Controller Module Specifications

Number of Channels:	2
Actuator Type:	Proportional or integrating, hydro-mechanical or pneumatic actuators

Driver

10 mA Version:	±12.25 mA max for 14.2 bits effective resolution
25 mA Version:	±30 mA max for 15.5 bits effective resolution
50 mA Version:	±60 mA max for 14.8 bits effective resolution
100 mA Version:	±120 mA max for 15.8 bits effective resolution
200 mA Version:	±245 mA max for 15 bits effective resolution
Dither Current Amplitude:	0 – 20% of the output range, User configurable
Dither Current Duty Cycle:	5 – 95%, User configurable
Dither Current Frequency:	10 – 500 Hz, User configurable
Max Load Resistance	15/(maximum current for range, in amps)
Min Load Resistance	1/(maximum current for range, in amps)

Released

Position Feedback

Feedback Devices:	1 or 2 per channel
Device Types:	3, 4, 5, or 6 wire LVDT, RVDT, 4 – 20 mA, DC Voltage
VDT Excitation:	2.5 to 4 kHz sine wave, amplitude programmable from 4 to 8 Vrms, 5% THD (Total Harmonic Distortion) maximum.
VDT Primary Winding Impedance:	75 Ohms to 2 kΩ
DC Voltage Feedback:	0 – 10 VDC transducer input 50 kΩ input impedance +/- 25 mV accuracy, 5 mV resolution
4 – 20 mA Position Feedback:	2 – 22 mA range 0.25% of full scale accuracy, 0.5% of full scale over temperature 15 bit resolution, 1% linearity 150 – 300 Ohm Input impedance 200 VDC, - 60 dB CMRR at 60 Hz 2 ms nominal filter
Transducer Power	22 VDC +/- 10% excitation voltage output, 60 mA maximum

Performance

Driver Accuracy:	1.0% of full scale
Driver Resolution:	14 bits minimum
Position Accuracy:	0.25% of full-scale @ 25 °C, does not include transducer error
Position Drift:	1.5% of full-scale over the full temperature range, Does not include transducer temperature drift
Source Current Readback Tolerance	±5% of full scale
Return Current Readback Tolerance	±5% of full scale

Fault Detection

Isolation:	500 Vrms between the integrating actuator output to chassis, input power, or other I/O channels
Driver:	Alarm if current error > 10% source current, 15% return current Alarm if open Alarm if shorted
Excitation:	Alarm if voltage error
Feedback:	Alarms for: open-wire, voltage-out-of-range, computed position out-of-range; feedback voltage difference. Ranges are programmable
Position Error:	Programmable threshold and delay
Microcontroller:	Module and System level watchdog monitors, and module power supply monitors
System:	Outputs turn off if communications with the CPU module are lost

Fault Accommodation

Excitation:	Protected from damage due to excitation outputs shorted together, shorted to feedback inputs, shorted to driver output, shorted to +/- 32 VDC continuous, or shorted to chassis ground. Protected from damage due to excitation outputs open, or reverse polarity.
Feedback Inputs:	Protected from damage due to feedback inputs shorted together, shorted to driver output, shorted to feedback inputs, shorted to +/- 32 VDC continuous, or shorted to chassis ground. Protected from damage due to feedback inputs reverse polarity.
Driver Output:	Protected from damage due to driver outputs shorted together, shorted to feedback inputs, shorted to excitation output, shorted to +/- 32 VDC continuous, or shorted to chassis ground.

Released

A functional block diagram of the module is shown in Figure 9-2.

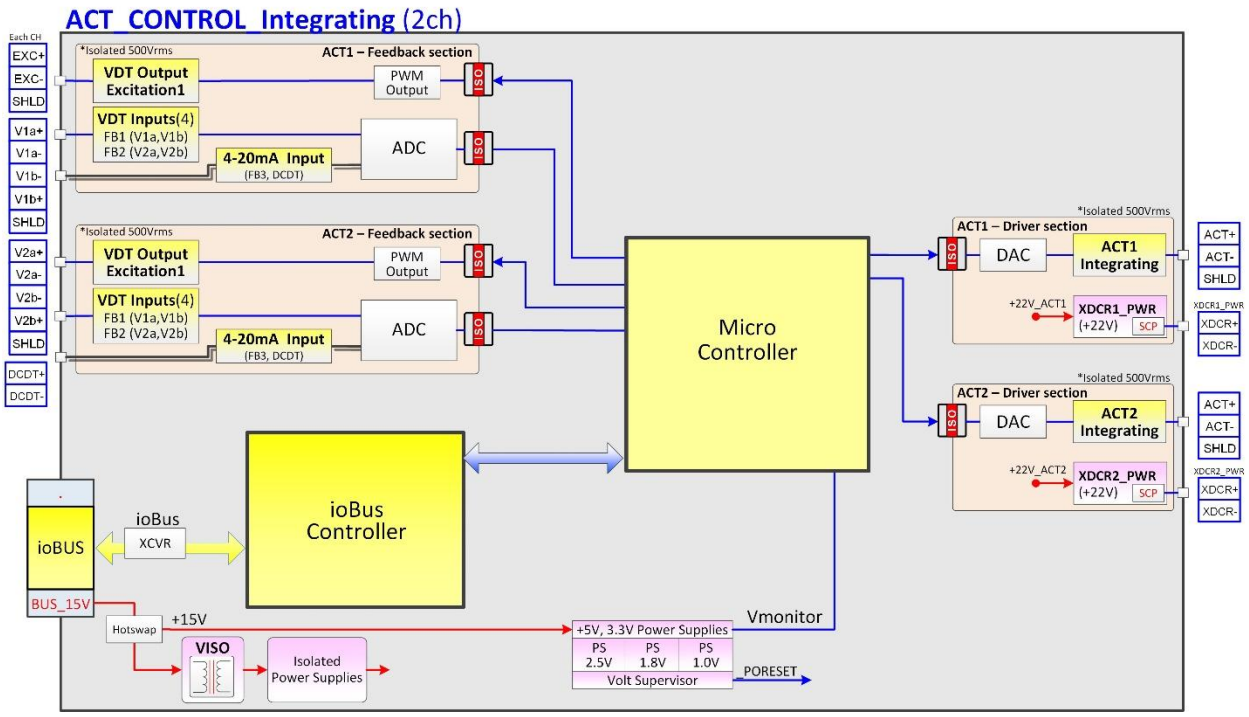

Figure 9-2. Integrating Actuator Controller Module Block Diagram

9.1.3. Installation

The Integrating Actuator Controller Module slides into card guides in the control's chassis and plug into the backplane. They are secured with screws at the top and bottom. Each mounting screw should be torqued to 6 Nm (53 lb-in) but can also be hand-tightened.

NOTICE

Backplane Connector Pins

To prevent damage to the backplane connector pins, the shipping connector cover should not be removed until the module is ready to be inserted into the control's chassis. Care should be given when handling the module without the shipping connector cover to avoid broken or bent pins. Make sure the module is aligned in the chassis module guides before fully seating the module.

All the module inputs and outputs are accessible on the connectors on the front of the module or on the FTMs, and the channels are labeled to correspond to their designation in the application software (input one on the module will be input one in the application software). Terminal blocks have the ability to be keyed by the end user if required.

All Integrating Actuator Controller Module inputs and outputs must be shielded twisted pair wiring.

9.1.3.1. Configuration Notes:

Each XT integrating actuator controller can have the following feedback types on Feedbacks 1 and 2:

- LVDT/RVDT
- DCDT voltage feedback
- DCDT current feedback (only supported on Feedback 1)

Released

- None

For example, Actuator Channel can have Feedback 1 configured to DCDT current, Feedback 2 configured to LVDT.

9.1.4. Module Wiring

9.1.4.1. I/O Module Connectors for Direct Wiring

The integrating actuator controller module has two connection points for signal wiring, labeled J1 (top) and J2 (bottom). Each connection point will accept either a terminal block plug for directly wiring to the module or an FTM cable connector end for wiring remotely using an FTM. For the direct wiring option, the connector plugs for J1 are labeled with terminal numbers 1-36, J2 connector plugs are labeled with terminal numbers 37- 72. J1 and J2 connectors may be keyed differently, so that they will only fit in the correct position on the module. When attaching the connectors or FTM cables to the I/O module, securely tighten the flange screws on both sides to prevent the connectors from accidentally coming loose. Figure 9-3 shows the integrating actuator controller module field wiring connector.



Figure 9-3. Integrating Actuator Controller Module Connector

Each connector plug is equipped with an integrated strain relief tab. The strain relief tab can be removed if desired by sliding it down the center line of the connector. Wiring can be secured to the strain relief tab by running zip ties through the provided holes in the tab.

When preparing wire for the connectors, strip the insulation back 0.24-0.28 in (6-7mm) from the end. The connector will accept the wire sizes outlined in Table 9-4. Note that field wiring should be selected by the customer based on local electrical code regulations.

Table 9-4. Integrating Actuator Controller Module Connector Wire Gauges

	AWG		mm^2	
	Min	Max	Min	Max
Stranded Wire	28	16	0.08	1.5
Solid Conductor	28	16	0.08	1.5
Ferruled Stranded Wire	24	18	0.25	1

Each I/O module ships with a special nylon tool to assist with wiring the connectors, see Figure 9-4. The connectors have spring loaded terminals. To insert a wire into the connector, slide the long end of the tool along the exposed spring on the side of the connector, pressing down firmly. The tool will lock into place and lock the terminal open when the tool is fully inserted into the connector, see Figure 9-5. Caution: Do

Released

not try to actuate the terminal spring by prying the tool against the connector, this may lead to damaging the connector or the tool. With the tool fully inserted, the terminal will be opened allowing the wire to be inserted into the hole. To secure the wire, remove the tool from the connector. Be careful to not let the spring terminal close on the wire insulation. If needed, a screwdriver with a maximum 2.5 x 0.4mm blade may be used in place of the supplied tool.



Figure 9-4. Special Nylon Wiring Tool



Figure 9-5. Connector Tool Operation

To troubleshoot or check terminated wiring, the exposed metal springs can be used as probing test points.

Additionally, each I/O module also ships with coding elements. Coding is optional and allows the customer to key each connector uniquely so that they cannot be plugged into the wrong module position, both between J1 and J2 and across modules. There are two steps to keying a connector. The first step is to select one or more locating tabs on the bottom of the terminal on the connector plug and snip it off as shown in Figure 9-6. Then insert the coding elements into the matching terminal slots of the mating connector on the module and break them off the holding tool as shown in Figure 9-7. It is suggested to have a unique keying combination for each connector in the system.

Released

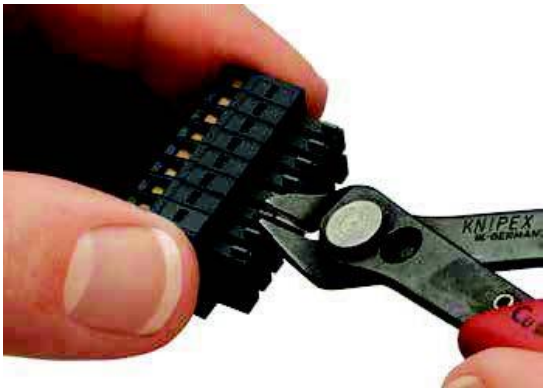

Figure 9-6. Removing Connector Plug Keying Tab

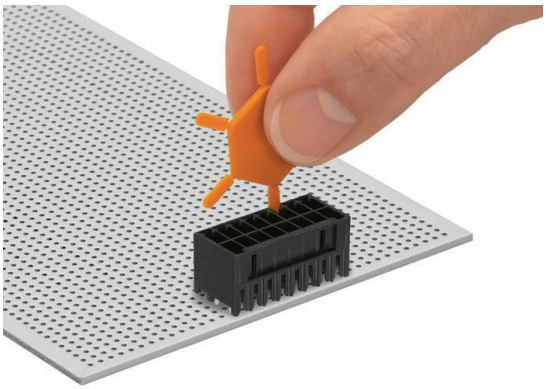

Figure 9-7. Inserting the Keying Element into the Module Connector

The MicroNet XT Integrating Actuator Controller module connector pinouts are shown in Figure 9-8.

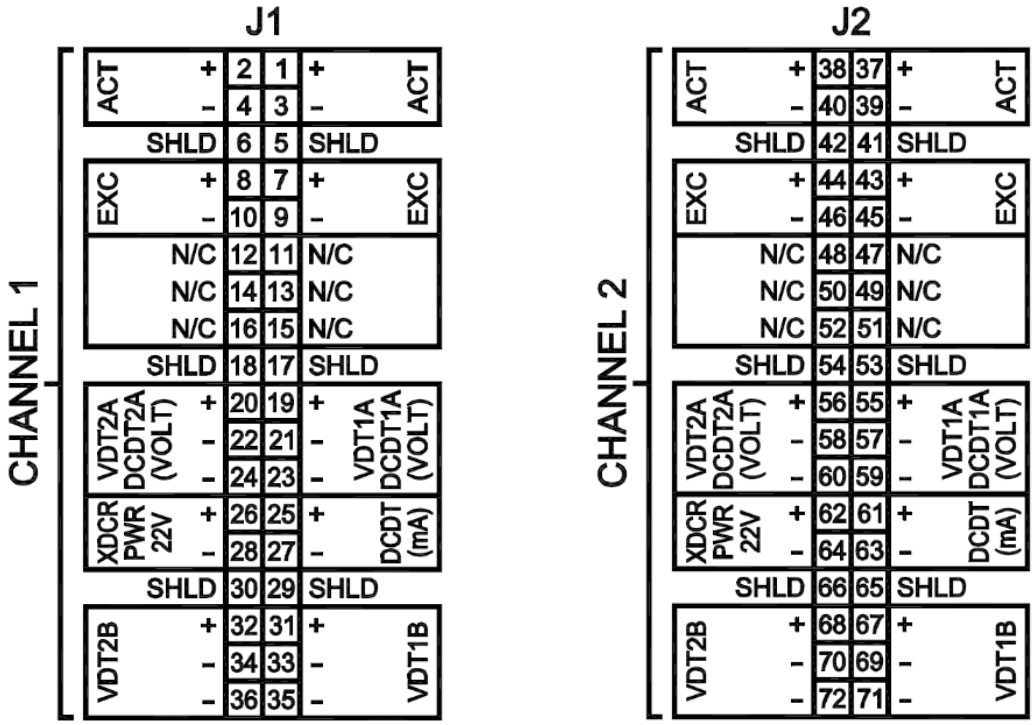

Figure 9-8. Integrating Actuator Controller Module Connector Pinout

Released

9.1.4.2. FTM Modules for Remote Wiring

The Analog FTM offers an alternative to the standard front module connector plugs when remote wiring is required. This provides flexibility in system installation and configuration. Importantly, the same I/O module part number can be utilized for both direct wiring and FTM wiring options, allowing for seamless integration and easy adaptation to various wiring preferences.

A mixed wiring approach is supported, meaning that direct wiring and FTMs can be used together within the same system. Each connector found on the I/O module is designed to accommodate an FTM, with one FTM assigned per module connector.

To further enhance installation reliability, FTMs support connector coding. This feature is optional but recommended, as it prevents the accidental crossing of cables between the I/O module connectors or FTMs. For guidance on applying connector and cable coding inserts, refer to the direct wiring section, which provides detailed instructions for proper coding procedures.

This module is designed to work with the standard analog FTM. There are two available configurations of the analog FTM to accommodate different installation preferences. Users can choose between screw terminal blocks and spring terminal blocks. This flexibility allows for easier adaptation to various wiring practices and installation environments.

Table 9-5. MicroNet XT Analog I/O FTM Part Numbers

Description	Part Number
MicroNet XT AIO FTM – Screw Terminals	5466-5010
MicroNet XT AIO FTM – Spring Terminals	5466-5011

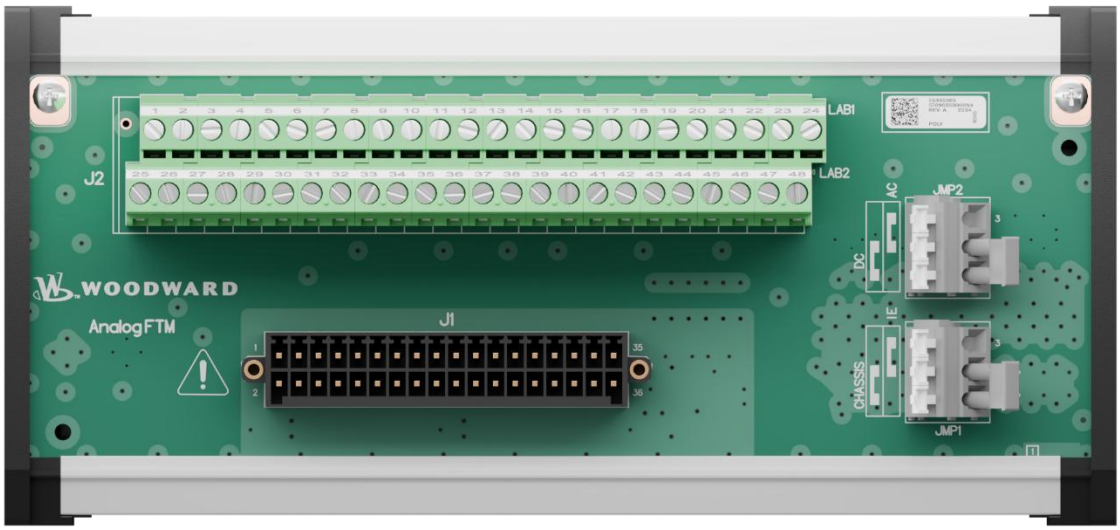

Figure 9-9. Analog FTM with Screw Type Terminals

Released

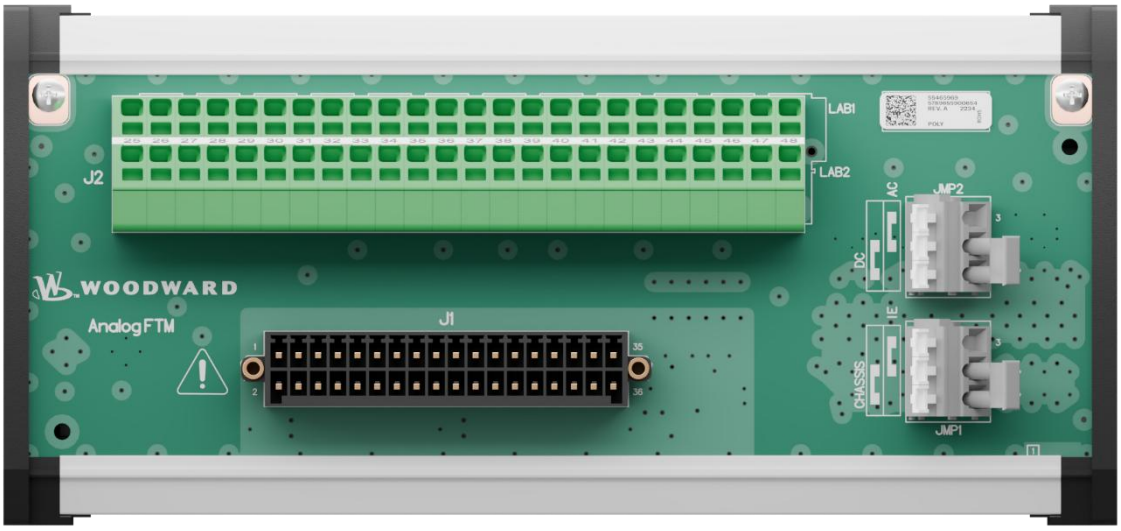

Figure 9-10. Analog FTM with Spring Type Terminals

Each FTM is connected to its corresponding I/O module by means of an FTM cable. To accommodate different installation requirements, the FTM cable is available in multiple lengths. This flexibility allows for optimal positioning of the FTMs within the control cabinet, making installation and maintenance easier regardless of cabinet size or layout.

Released

Table 9-6. MicroNet XT Analog I/O FTM Cable Part Numbers

Length	Part Number
6ft (1.8m)	5417-2106.6
8ft (2.4m)	5417-2106.8
10ft (3m)	5417-2106.10
12ft (3.6m)	5417-2106.12
14ft (4.3m)	5417-2106.14
16ft (4.9m)	5417-2106.16
18ft (5.5m)	5417-2106.18
20ft (6.1m)	5417-2106.20



Figure 9-11. Black Analog FTM Cable

To ensure proper connection and reliable operation of the FTMs, it is essential to prepare the field wiring correctly before installation. Begin by stripping the insulation from the end of the wire, removing between 0.24 and 0.28 inches (6 to 7 millimeters) to expose the conductor. This preparation allows the wire to fit securely into the terminal and make good electrical contact.

The FTMs are designed to accommodate the wire sizes specified in Table 9-7. It is the responsibility of the customer to select appropriate field wiring in accordance with local electrical code regulations to ensure compliance and safety during installation and operation.

For FTMs equipped with screw-type terminals, it is important to secure the connection by tightening the screw to a torque value between 4.4 lbf-in and 5.3 lbf-in (0.5 Nm to 0.6 Nm). Applying the correct torque helps maintain a stable and secure electrical connection, reducing the risk of loose wiring or terminal damage.

Table 9-7. FTM Wire Gauges

Wire Types	AWG		mm^2	
	Min	Max	Min	Max
Stranded Wire	24	12	0.2	2.5
Solid Conductor	24	12	0.2	4
Ferruled Stranded Wire	24	14	0.25	2.5

Released

The Integrating Actuator Controller module FTM pinout is shown in Figure 9-12.

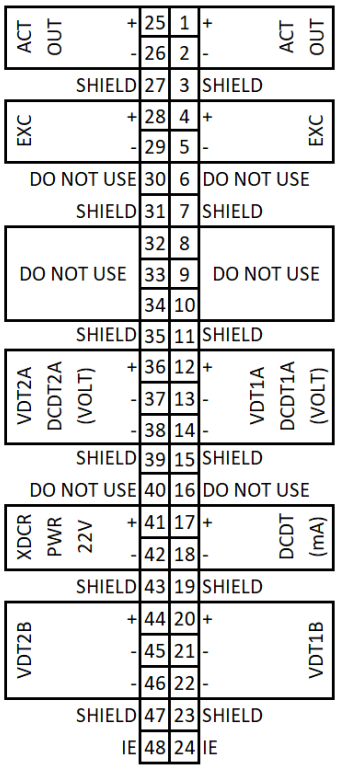

Figure 9-12. FTM Wiring for the Integrating Actuator Controller Module

The FTM provides four distinct options for grounding shield drain wires. This flexibility is achieved using two configuration jumpers, labeled JMP1 and JMP2, located on each FTM. For best all-around EMC performance, Woodward recommends the default jumper settings.

9.1.5. JMP1: Ground Selection

JMP1 determines whether the shield drain wires are connected to the cabinet ground or to an isolated ground known as Instrument Earth (IE). By default, JMP1 is set to connect shields to the cabinet ground, which is established via the DIN rail. The FTMs achieve grounding to the DIN rail through metal DIN rail clips attached to the module base.

- Cabinet Ground: To tie the shields directly to the cabinet ground, place the jumper in the “CHASSIS” position of JMP1.
- Instrument Earth (IE): For installations that require a separate isolated ground for field wiring, move the jumper to the “IE” position. The IE grounding wire should then be terminated at terminals 24 or 48, as indicated in Figure 9-12.

The factory default configuration for JMP1 is the “CHASSIS” position, connecting shield drain wires to the cabinet ground.

9.1.6. JMP2: Direct or Capacitive Coupling

JMP2 allows further customization by configuring whether the shields are directly shorted to the selected ground or capacitively coupled to it. The shields can be:

- Directly Shorted (DC Coupling): In this mode, the shield is directly connected to either cabinet ground or IE, depending on the JMP1 setting. This is the factory default position for JMP2.
- Capacitively Coupled (AC Coupling): To enable AC coupling, place the jumper in the “AC” position of JMP2. This configuration couples the shield to ground through a capacitor, providing an alternative grounding method if required by the installation.

By default, JMP2 is set for direct coupling (“DC”) to ground from the factory.

Released

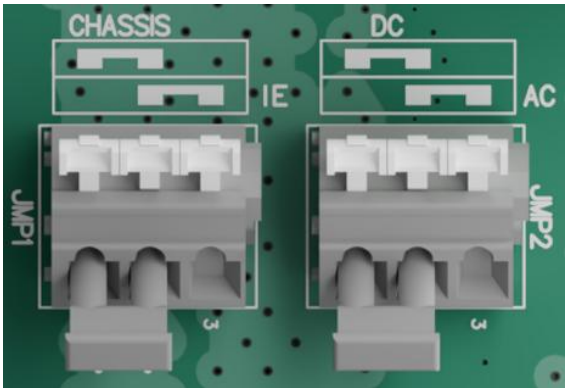

Figure 9-13. FTM Shield Grounding Configuration Jumpers

9.1.7. Field Wiring

Figure 9-14 illustrates the wiring for the Integrating Actuator Controller module's actuator driver outputs in a variety of configurations. These wiring examples provide guidance on how to properly connect the actuator driver outputs to support different application requirements. Each configuration is designed to ensure compatibility and optimal performance with the corresponding actuator types in the field. Note that there are two sets of actuator driver terminals, ACT (+) and ACT (-) on the front connectors and the FTMs, these are redundant terminals for wiring convenience, either pair or both may be used.

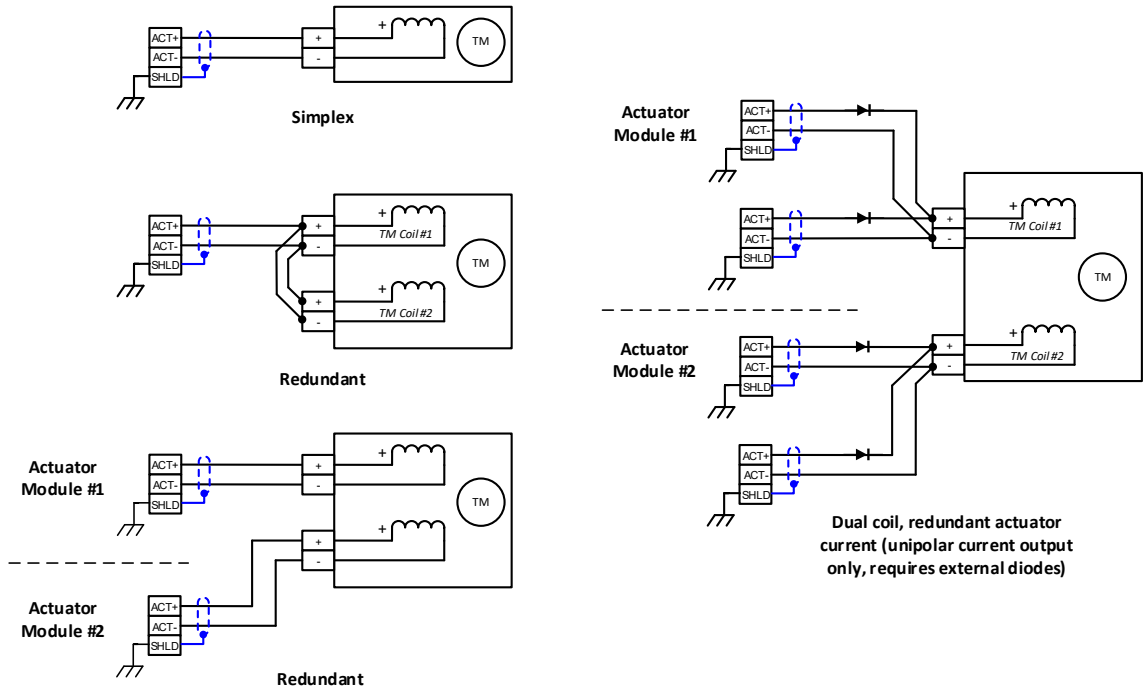

Figure 9-14. Integrating Actuator Controller Module Actuator Driver Wiring Example

Figure 9-15 and Figure 9-16 illustrate the wiring configurations for position feedback sensor inputs on the Integrating Actuator Controller module. Multiple feedback configurations are shown, providing clear guidance on connecting position sensors to support various application requirements. Note that there are two sets of excitation terminals, EXC (+) and EXC (-) on the front connectors and the FTMs, these are redundant terminals for wiring convenience, either pair or both may be used.

Released

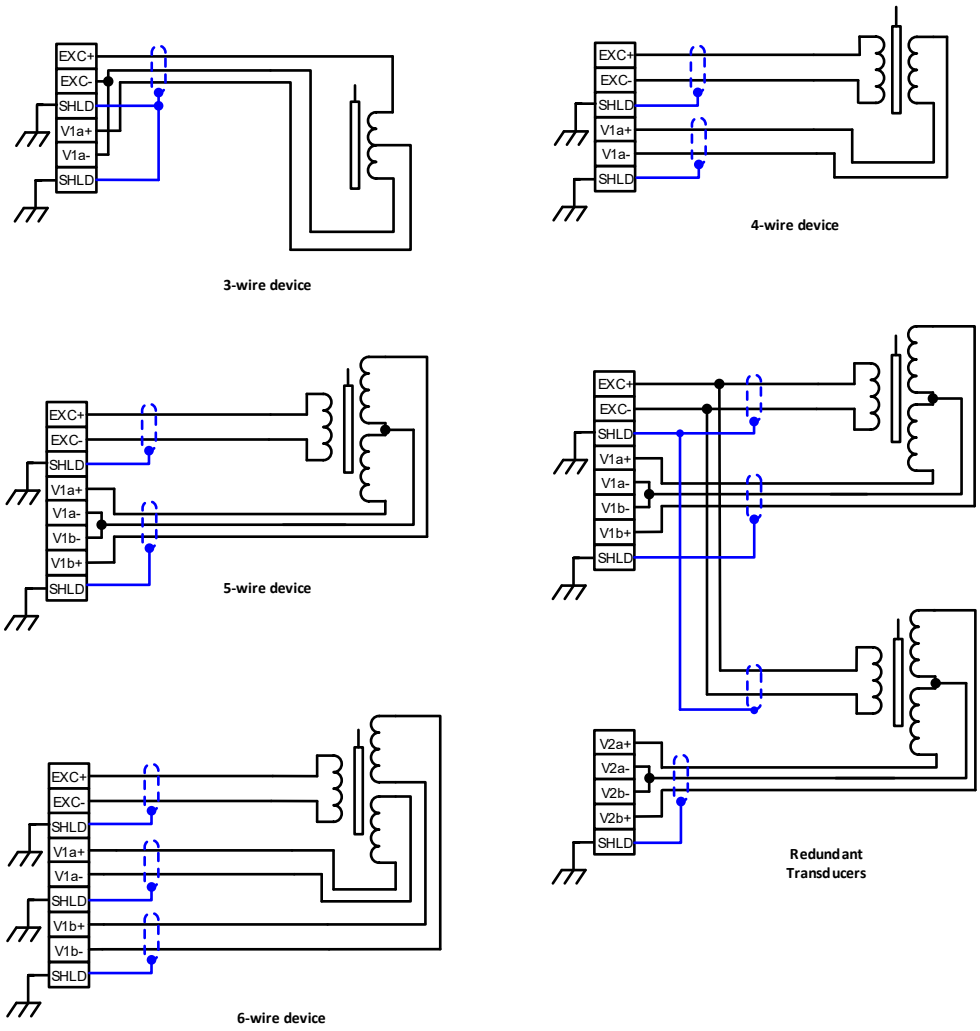

Figure 9-15. Integrating Actuator Controller Module LVDT/RVDT Wiring Example

Released

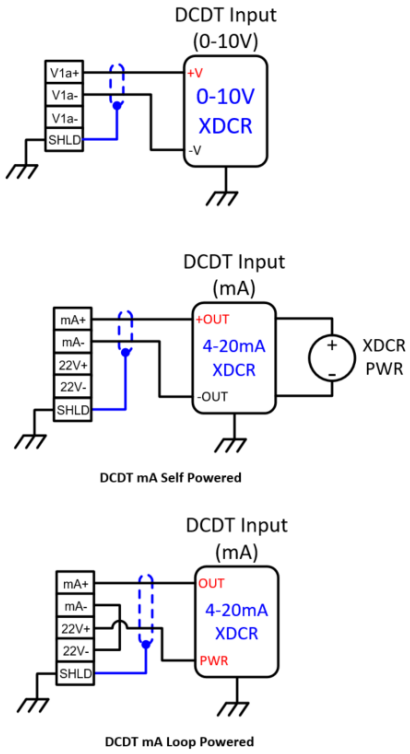

Figure 9-16. Integrating Actuator Controller Module DCDT Wiring Example

9.1.8. Troubleshooting

Each module contains a status LED that can illuminate GREEN or RED, to annunciate the module health.

A green LED indicates the module is healthy and operational.
A red LED indicates the module is in IOLOCK, initializing, in HALT mode, or has a fault.

During initialization of the module, (after every CPU reset), the status LED turns red. The CPU then tests each I/O module. If the diagnostic test is not passed, the status LED remains red and/or blinks, otherwise, the status LED turns green. If the status LED remains red, the module may be located in the wrong slot, be held in IOLOCK or HALT mode by the CPU, or be faulty.

9.1.8.1. Flash Code Table

Flash codes are comprised of up to two numbers and are shown in Table 9-8. Each number is denoted by 0.25 second flashes and pauses, with one second pauses between the two numbers and a three second pause before the code repeats. Flash code definitions are module specific. Definitions for the Integrating Actuator Controller module are in Table 9-8.

Released

Table 9-8. Integrating Actuator Controller Module LED Indications of Failure

	Flash Code	Failure
Main Application	1, 2	Tick Slip Fault
	1, 3	MFT Timing Fault
	1, 4	Rate Group Key Fault
	1, 5	IPD MFT or IPD RG Timing Fault
	1, 6	OPD MFT of OPD RG Timing Fault
	1, 7	Background Slip Fault
	1, 8	Watchdog Fault
	1, 9	GAP Application Requested Fault
	2, 1	Parameter Fault
	2, 2	Parameter Version Fault
	2, 3	SPI Timing Fault
	2, 4	Non-volatile Memory (read/write) Fault
	2, 6	Digital Core Power Supply Fault
	2, 7	Software Fault
	2, 8	Software Initialization Fault
	2, 9	Software Exception
	2, 10	CPU Fault
	2, 11	Invalid Application Part Number
	2, 12	Invalid Application Revision
	2, 13	Invalid FPGA Part Number
	2, 14	Invalid FPGA Revision
	2, 15	HSSL Communication Fault
Bootloader	3, 1	Invalid Application Image
	3, 2	Invalid FPGA Image
	3, 3	Invalid Bootstrap Images
	3, 4	FPGA Startup Failed
	3, 5	Startup Handshake Not Acknowledged.
	4, 1	System Clocks Initialization Error
	4, 2	Internal MCU Flash Memory Error
	4, 3	External SPI Flash Memory Error
	4, 4	MCU Exception Detected
	4, 5	Internal MCU RAM Memory Error
	4, 6	MCU Initialization Error
	4, 7	SMU Initialization Error
	4, 8	SMU Activation Error
	4, 9	Runtime Recovery Failed
	4, 10	NULL-pointer Dereference
	4, 11	Destructive Unlock Failed
	4, 12	Flash Loader Initialization Failed
	4, 13	Invalid Bootloader Part Number
	4, 14	Invalid Hardware ID
	4, 15	Invalid Bootloader Revision
Bootstrap	5, 1	System Clocks Initialization Error
	5, 2	Internal MCU Flash Memory Error
	5, 3	External SPI Flash Memory Error
	5, 4	HSSL Communication Error
	5, 5	MCU Exception Detected
	5, 6	MCU Initialization Error
	5, 7	Module Slot Initialization Failed
	5, 8	Flash Loader Initialization Failed
	5, 9	Invalid Bootstrap Part Number
	5, 10	Invalid Bootstrap Revision
	5, 11	Invalid FPGA Part Number
	5, 12	Invalid FPGA Revision

Detailed Fault Description for Active Flash Code can be Obtained in AppManager.

Released

9.1.8.2. Fault Detection (I/O)

In addition to detecting MicroNet XT Integrating Actuator Controller Module hardware faults, the application software may detect I/O faults.

Actuator Driver Output Faults: The module monitors the control voltage and annunciates faults. The application software determines the course of action in the event of a fault.

Actuator Driver Feedback Faults: The module monitors the control voltage and annunciates faults. The application software determines the course of action in the event of a fault.

Microcontroller Faults: The system monitors a software watchdog, a hardware watchdog, and a software watchdog on the bus communications. All outputs are shut down in the event of a microcontroller fault.

9.1.8.3. Troubleshooting Guide

During normal control operation, if all of a rack's I/O Modules status LEDs are red, check the chassis' CPU module for a failure.

If during normal control operation only the MicroNet XT Integrating Actuator Controller Module's status LED is red, ensure that it is installed in the correct slot. If it is, then replace that MicroNet XT Integrating Actuator Controller Module. When a module fault is detected, its outputs will be disabled or de-energized.

9.1.8.3.1. Feedback Inputs

If a feedback input is not functioning properly, verify the following:

- Measure the input voltage on the terminal block. Ranges depend on the type of feedback device and are defined in the specifications table above.
- Check the wiring. If the inputs are reading open, look for a loose connection on the terminal blocks, disconnected or misconnected cables, or a missing jumper on the terminal block.
- Check the application software configuration to ensure that the input is configured properly.
- For DCDT transducers that are powered from the module supplied 24 VDC, check the power supply voltage.
- Calibrate or re-calibrate the channel. Refer to your system documentation or the GAP help files for the calibration procedure.
- After verifying all of the above, exchange the J1 and J2 cables. If the problem moves to a different channel, replace the cable. If not, replace the Integrating Actuator Controller module.
- If the readings are incorrect on several channels of the Integrating Actuator Controller module, corresponding to both cables, replace the Integrating Actuator Controller module.
- If replacing the module does not fix the problem, replace the FTM, if applicable. See instructions for replacing the FTM in) Chapter 10.

9.1.8.3.2. Exciter and Actuator Driver Outputs

If an exciter or actuator driver output is not functioning properly, verify the following:

- Check the wiring for a loose connection on the terminal blocks or disconnected or misconnected cables.
- Check the software configuration to ensure that the output is configured properly (check also specified Driver Output Min/Max Load Resistance).
- Calibrate or re-calibrate the channel. Refer to your system documentation or the GAP help files for the calibration procedure.
- After verifying all of the above, exchange the J1 and J2 cables. If the problem moves to a different channel, replace the cable. If not, exchange the cables at the FTM, so J1 is driving J2 and vice versa. If the problem moves to a different output, replace the Integrating Actuator Controller module. If the fault stays with the same driver, replace the Integrating Actuator Controller module or FTM, if applicable. See instructions for replacing the FTM in) Chapter 10.

Note that removing the cover on any module will void the warranty.

Released

IMPORTANT

Recommendation:
The module should be returned to Woodward every 6 years for health check and technical updates. This health check shall increase in frequency when the module is more than 20 years old.

Released

Chapter 10.
Installation and Replacement Procedures

10.1. Pre-Installation Information

10.1.1. Storage

Store MicroNet XT Controls and associated parts between –40 and +85 °C (–40 and +185 °F) at a maximum relative humidity of 90% non-condensing. If modules (especially power supplies) are to be stored for a long time, apply operating power to them at least once every 18 months. This is done to re-form the electrolytic capacitors and will prevent them from overheating upon initial power up after extended storage.

10.1.2. Unpacking

Unpack each part of the system carefully. Check the units for signs of damage, such as bent or dented panels, scratches, or loose or broken parts. If any damage is found, notify the shipper immediately.

10.1.3. Unit Location

Consider the following when selecting a cabinet location to mount the MicroNet XT Control:

- Make sure the MicroNet XT Control unit(s) are mounted in a dry location, protected from water and condensation.
- Make sure the ambient temperature of the system location is not lower than -40 °C (-40 °F) or higher than 70 °C (131 °F) and that the relative humidity is not over 95%, non-condensing.
- Provide adequate ventilation for cooling the units. If the units must be mounted near heat-producing devices, shield them from the heat.
- For proper airflow, the installation should allow a 3” (8 cm) air gap above and below the chassis.
- To ensure compliance with the EMC certification, all chassis mounting screws (1/4-20 or M6) should be installed to properly ground the chassis to the mounting plate.
- Do not install the units or their connecting wires near high-voltage/high-current devices or inductive devices. If this is not possible, shield both the system-connecting wires and the interfering devices/wires.
- If the selected location does not already have a conductor to a good earth ground, provide one.

10.2. Installation Procedures

⚠WARNING

Lockout/Tagout
LOTO

Ensure that personnel are fully trained on LOTO procedures prior to attempting to replace or service equipment on a “live” running Prime Mover. All safety protective systems (overspeed, over temperature, overpressure, etc.) must be in proper operational condition prior to the start or operation of a running engine. Personnel should be equipped with appropriate personal protective equipment to minimize the potential for injury due to release of hot hydraulic fluids, exposure to hot surfaces and/or moving parts, or any moving parts that may be activated and are located in the area of control of the unit.

⚠WARNING

EXPLOSION HAZARD—Do not remove or install modules while circuit is energized unless area is known to be non-hazardous.

⚠AVERTISSEMENT

RISQUE D’EXPLOSION—Ne pas enlever ni installer les cartes pendant que le circuit est sous tension sans s’assurer que la zone est non dangereuse.

Released

⚠WARNING

HOT SURFACES—The surface of this product can become hot enough or cold enough to be a hazard. Use protective gear for product handling in these circumstances. Temperature ratings are included in the specification section of this manual.

⚠WARNING

For Hazardous Location Installations
This equipment shall be installed in an "ec" Ex Equipment enclosure or in an enclosure that provides an ingress protection of at least IP 54 in accordance with IEC 60079-0. The interior of the enclosure shall not be accessible in normal operation without the use of a tool and must meet the construction requirements of IEC 60079-0.

⚠WARNING

ELECTRIC SHOCK—To reduce the risk of electric shock, Protective Earth (PE) must be connected to the termination point on the unit next to the label with the ⏚ symbol.

The conductor providing the connection must have a properly sized ring lug and wire gauge larger than or equal to 4 mm². The ring lug should be placed between the nut and star washer.

The calibration and checkout procedure should only be performed by authorized personnel. To be authorized personnel, personnel must be knowledgeable of the risks posed by live electrical equipment.

⚠CAUTION

DISCONNECTING DEVICE—A switch or circuit breaker shall be included in the building installation that is in close proximity to the equipment and within easy reach of the operator and that is clearly marked as the disconnecting device for the equipment. The switch or circuit breaker shall not interrupt the protective earth conductor.

10.2.1. Installing a CPU or I/O Module into an Unpowered Chassis

IMPORTANT

Before installing a module, check for broken connectors and bent pins.

1. Make sure that each module is installed in the correct slot. There are no keys to keep a module from being installed in the wrong slot. To aid in proper module placement, the module slots are labeled with the slot number. Prior to installing, verify that all connector pins are parallel and straight.
2. Align the circuit board edges in the card guides and re-position as necessary to prevent interference when the module is inserted. Install the module by aligning the circuit board edges inside the card guides and push the module straight in until it is approximately 25 mm (1 inch) from the backplane (do not make contact with the chassis backplane mating connectors).
3. With even pressure exerted at the top and bottom of the module and in one continuous motion, fully seat the module into the backplane mating connectors. Then secure the module screws.

IMPORTANT

If resistance is encountered when installing a module, do not force the module. Remove the module and check the connectors for bent contacts or foreign objects. Also check to ensure that the module screws are fully retracted. Forcing a module into place may break the connector or bend the securing screws.

4. See Replacement Procedures for replacing a module previously installed into a functional system.

Released

10.2.2. Installing a MicroNet XT Power Supply Module

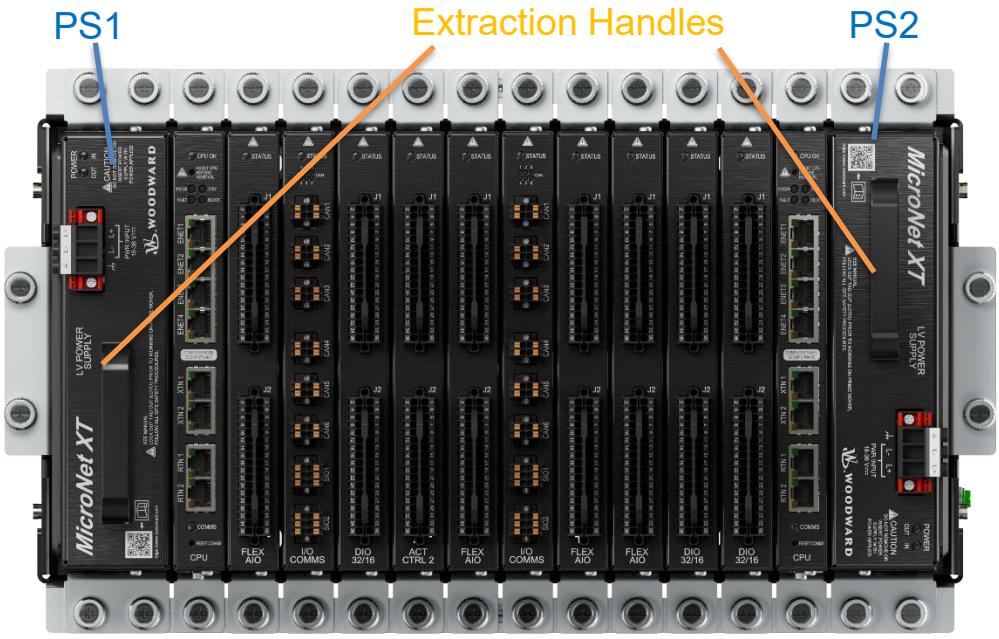

Figure 10-1. MicroNet XT Power Supply

Installing a Power Supply (PS1, PS2)

1. Ensure that power to the supply being installed is disconnected. Verify that all pins in the module connectors are parallel and straight.
2. Install a new power supply by aligning the top and bottom module brackets in the chassis card guides, then pushing the unit into the slots until the connectors on the modules and the connectors on the backplane make contact.
3. With even pressure exerted at the top and bottom of the supply's front panel, firmly push the unit into place.
4. Secure the module screws.

10.2.3. Installing FTMs

The system's Field Terminal modules (FTMs) mount on a standard DIN (35 x 7.5) rail (not provided). Mount FTMs within the length of the provided cable from the control's main chassis, leaving an adequate service loop.

Released

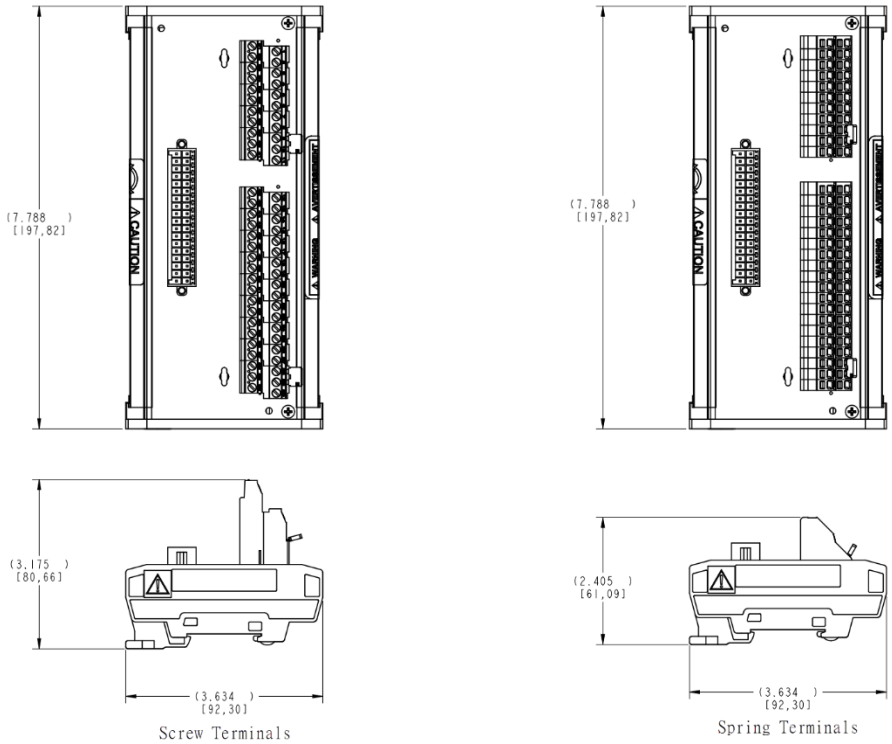

Figure 10-2. Simplex Discrete FTM Dimensions

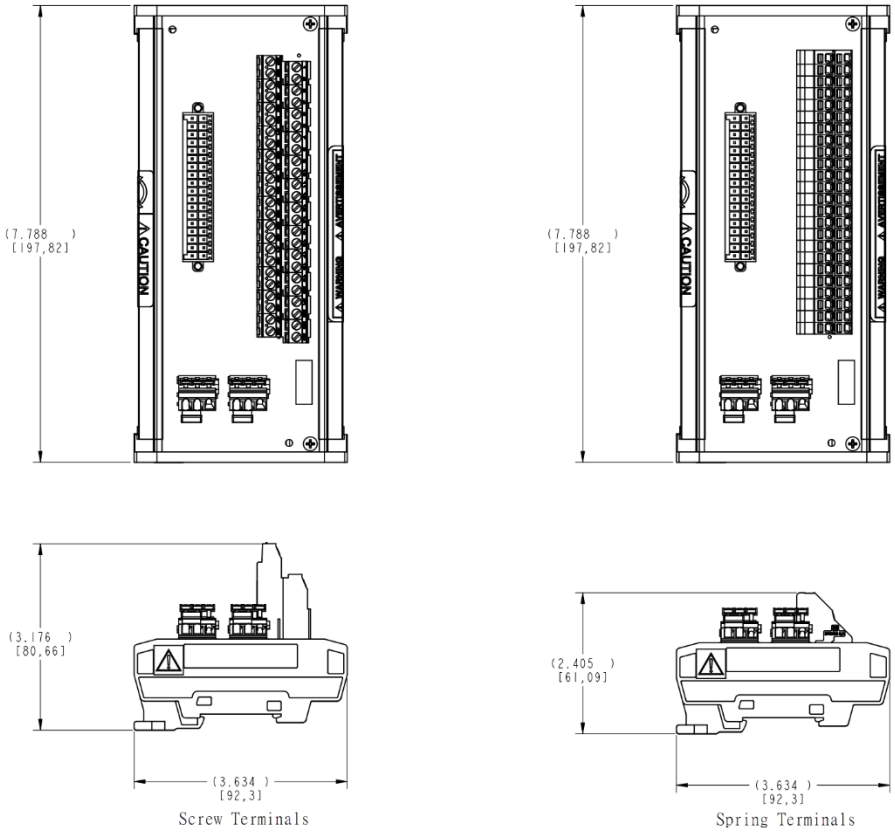

Figure 10-3. Simplex Analog FTM Dimensions

1. Cut a DIN rail strip to the desired length and mount it to a panel. Leave sufficient space between the DIN rail and other objects for accessibility.

Released

2. Drill and tap at least two holes per 300 mm (12 in) for appropriately sized hardware, and secure the DIN rail using screws and washers.
3. The mounting panel should be well grounded to protective earth via the cabinet structure or ground straps that are low RF impedance. Similarly, ground the DIN rail to the panel. Low RF impedance: length less than 4 times the cross-sectional circumference of the ground strap.
4. Verify that the DIN rail is at earth ground potential (connected to a panel that is at earth ground potential). If the DIN rail is not at earth ground potential, connect it to earth ground via a 4 mm² (12 AWG) green/yellow wire or braid, keeping the wire or braid as short as possible.
5. Snap the FTMs onto the DIN rail.
6. The FTMs are grounded to the DIN rail through integrated metal clips on the base. If the optional isolated Instrument Earth ground is required for the shield drains, connect a 4 mm² (12 AWG) wire between the IE ground terminal on the FTM and the IE grounding bus bar. Configure the grounding jumpers on the analog FTMs to use the IE grounding terminals. See the FTM sections in the I/O module chapters for more information.
7. After both the FTM and the I/O module are installed, connect them together using the FTM cable.

10.3. Application Information for Standard (Non-EMC) Cabinets

10.3.1. Cable Shields and Cable Shield Termination

All cable shields must have a galvanically connected DC termination to ground at one end, and the opposite end may be an AC termination to the local ground, galvanically isolated but connected through a capacitor that passes AC signals, or floated, galvanically isolated, from the local ground.

MicroNet XT Control is designed to have the DC termination of shields to ground at the control and float or AC terminate the shield at the opposite end (the field end). The cabinet installation wiring also requires that the IO signal shielding be either AC or DC terminated at the boundary of the cabinet where cables and wiring transition from outside the cabinet to inside it. Optional AC terminations should be made with a ≥1000V DC, ≥0.01µF ceramic capacitor, or similar low ESL & ESR capacitor.

A DC shield termination point is provided at the module connector for the analog inputs (TC, RTD, 4-20mA, & 0-5V), analog outputs and DIO connector group wiring. All analog inputs and outputs should be wired using shielded twisted-pair or shielded twisted-triple wiring. No AC or DC terminations of the shield to ground, or grounds, are expected along the shielded cable length and this should not be allowed. Shield terminations should be at the ends of the cable. DIO may be either unshielded or shielded as a grouping of the wires on each connector. DIO wiring must have wiring grouped to include signal, signal common, and signal power in all bundles of wiring, but may be segregated into DI type and DO type groupings per connector. The preferred installation is to shield the DIO wiring groups.

The cabling in installation environments for the MicroNet XT Control typically also has a secondary shield around the bundled wire shields, the bundled signal cable shields, or the signal cable bundles. The outer shield may be identical to the inner shield, or it may be provided by items like metal conduit or enclosed cable trays, braided steel wire armor, the skid structure package, or similar shielding. The secondary shield creates what is called a “double shield” and the secondary shield is referred to as the “outer shield”. The signal or signal group shields are considered “inner shields” in double shielded cases.

Double shielded cables where the inner and outer shield are part of the cable, rather than the outer shield being another structure, have an insulator between the inner and outer shield, and typically have an insulator around the outer shield.

The outer shield is also DC terminated to ground. The outer shield (except double shielded cables where both shields are integral to the cable) may be terminated only at one point, or it may be terminated at many points along its length due to its implementation. The outer shield (except on double shielded where shields are both integral to the cable) may be broken along the cable or cable bundle length, discontinuous due to its implementation. Shielded cables are only intended to have shields DC terminated at one point and AC terminated at the opposite end.

Released

AC and DC termination of outer shields to ground is usually required. Termination is desired in a similar manner to the inner shield termination, except the opposite ends of the two shields are DC terminated to ground. The outer shield is DC terminated at the end opposite from the inner shield DC termination. Double shielded in this manner is most effective for all EMC installations.

A double shielded cabling implementation is an option, except in military marine applications where double shielding is required for all signal I/O (power distribution busses in military marine applications must not be shielded).

Shield termination to ground may be an iterative and deterministic process to get the correct types of terminations based on containing or coupling electric, magnetic, and/or electromagnetic interference from or to signals respectively.

In EMC environments where sensitive equipment coexists with control gear or in harsh conditions where high current or high voltage noise exist, an additional shield layer ground will help with noise suppression and immunity performance of the control. Double shielded cable construction is strongly suggested.

Remove the insulation on the cables for MicroNet XT I/O to expose the shield, being careful not to cut the shield or nick the inner insulation layers. A metal "P-clip" or similar clamping mechanism is used around the cable shield to AC or DC terminate it to ground within 300 mm (12 inches) of the cabinet entrance or exit boundary. This may be done as the outer shield in a double shielded cable installation or as the only shield in a single shield shielded cable installation.

The shield grounding termination mechanisms should be galvanically compatible with the cable shield, as well as the grounding point in the cabinet (usually a mounting panel). Typically, metal "P-clips", annealed for spring tension, made of either stainless steel or tin-plated copper are readily available commercially and are acceptably compatible with the typical cable shield of tin plated cooper wire that is braided around the signal wires or bundles of wires.

Wiring must be in accordance with local electrical code regulations. Refer to safe conditions listed in Special Conditions for Safe Use.

10.3.2. Wiring Notes

It is recommended that 0.5 mm² (20 AWG) or larger twisted, shielded wire be used between each external device and the MicroNet XT Modules or FTMs.

- Shields inside the cabinet housing for the MicroNet XT should be connected to chassis/earth ground at all intermediate terminal blocks, as well as terminated at the control terminal block.
- The length of exposed wire extending beyond the shield should be limited to 25 mm (1 inch) but may be sufficient at 75 mm (3 inches).
- Cable shields must be electrically continuous from the signal source to the point where the signal wire enters the module or FTM.
- Take care to prevent ground loop wiring when interfacing to other devices. If needed, the connection to chassis/earth ground may be made through a 10 nF 1.5 kV ceramic capacitor.
- Shields should be terminated to the cabinet at the entrance or exit point with a grounding bar or similar low impedance ground. Shield termination should be only directly grounded to chassis at one end, preferably the MicroNet XT cabinet end.
    - The ground bar may be either a direct connection to the cabinet frame protective earth or via an AC (capacitor ~0.01 µF) connection where 0.01 µF capacitors are between the bar and cabinet frame/panel at least every 150–200 mm (6–8 inches) of bar length. There may be up to one capacitor per shield as well.
- Do not place signal wires in the same conduit as high voltage or large current-carrying cables.

Discrete Inputs (DI) leaving the cabinet housing the MicroNet XT should be grouped together based on field signal source location and be shielded as a group. The shield termination should be to the chassis ground on the cabinet housing the MicroNet XT system; the shield termination should only be to the MicroNet XT's cabinet. The Discrete Inputs should also have a common wire (wetting voltage common), grouped with them inside the shield. The field end of the common wire should be un-terminated, unless wetting voltage is provided remotely in the field.

Released

Relay Driver/Discrete Outputs leaving the cabinet housing the MicroNet XT should also be grouped together based on field relay coil or input location and be shielded as a group. The shield termination should be to the chassis ground on the cabinet housing the MicroNet XT system; the shield termination should only be to the MicroNet XT's cabinet. The Discrete Output (DO) wires should also have a common wire (coil voltage common), grouped with them inside the shield. The field end of the common wire should be un-terminated, unless coil voltage is provided remotely in the field.

DI and DO shielding may be electrically continuous metal conduit, cable armor, or completely enclosed metal cable ways, as well as shielded cable, as long as the items listed are grounded only to the cabinet housing the MicroNet XT system and are electrically continuous between the field termination and cabinet.

See Application Note 51204 for a more detailed discussion on shield terminations. The length of exposed wire extending beyond the shield should be limited to 25 mm (1 inch), but with care the exposed area may be as long as 75 mm (3 inches) long.

If the panel that the control chassis is mounted on is not at earth ground potential, connect it to earth ground via a 4 mm² (12 AWG) or larger green/yellow wire, strap, or flat hollow braid, keeping the wire or braid as short as possible (75 mm or shorter for 4 mm² (12 AWG). The mounting panel should be well grounded to protective earth via the cabinet structure/frame or ground straps that are low RF impedance. Low RF impedance: length not greater than 4 times the cross-sectional circumference of the ground.

For compliance with EMC standards, it is required that all analog and discrete input / output wiring be separated from all high voltage or high current wiring.

Since it is not shielded, power wiring leaving the cabinet housing the MicroNet XT may couple noise if not segregated and routed directly against the grounded metal of the cabinet & mounting plates.

If segregation and routing against the grounded panels of power wiring is not possible, a power line filter at the exit/entrance point of the cabinet, or a power connection to the MicroNet XT may be needed. A power line filter is not expected to be needed but may be needed if there is noisy equipment in the cabinet beyond the MicroNet XT, or there is sensitive equipment collocated with the MicroNet XT control.

Released

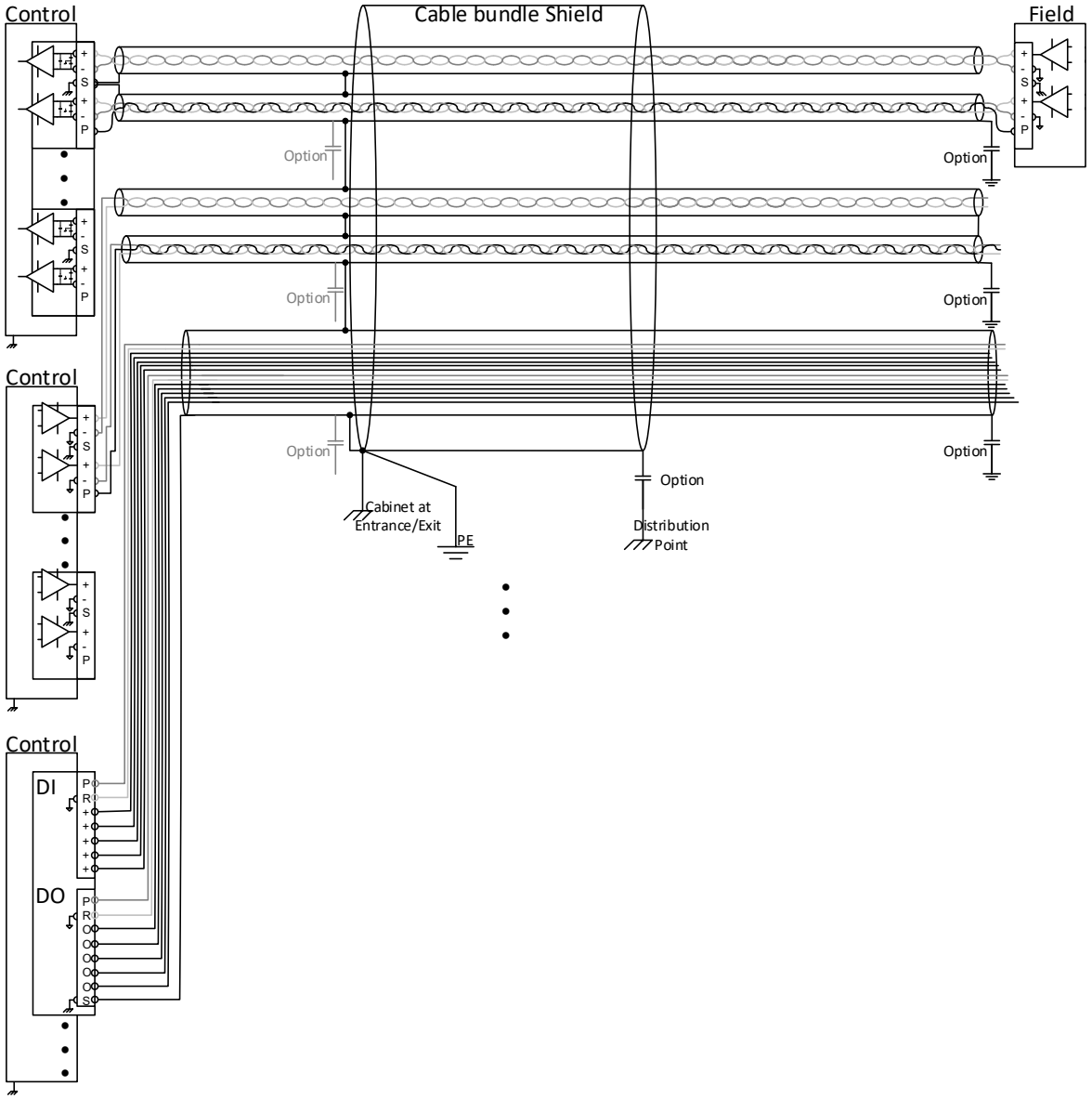

Figure 10-4. Cable Shield Termination Diagram

Released

10.3.3. Grounding and Grounding Concerns

Ground or grounds must first address implementation of safety ground requirements. It is also possible to meet the safety ground requirements and maintain a very good EMC ground.

NOTICE

Do not connect chassis ground or PE ground to any I/O signal reference, common, or return.

Safety Ground, Earth Ground, and Reference Systems may be grouped into three main categories:

Single Point Ground Scheme
The first grounding philosophy is single point grounding. This assumes there is a single physical location, referred to as an equipotential point or plane. An Instrumentation Earth is an example of this.

The drawback of this system is that it requires large gauge copper conductors for ground wires longer than 25cm. The cost of the copper over long distances is becoming high enough to not be economically viable.

Multipoint Point Ground Scheme
The second grounding philosophy is multipoint grounding. This assumes there is an equipotential reference plane or ground. This grounding scheme is very effective for high frequency noise reduction and is the most typical system used for sub systems to meet safety requirements. This type of grounding is used for digital circuit design and RF designs.

The drawback of this system is when there are large current levels in the reference plane (as there are in power station applications), there will be a significant low-frequency noise current flowing in “ground”. When noise is induced into cable shields and circuitry, the “noise” sensitive analog signals like RTDs and TC’s (potentially up to and including Analog Inputs and Analog Outputs in the 0-5V or 4-20mA range) may be negatively affected.

Hybrid Grounding Scheme
The hybrid grounding system attempts to provide the best of a single point grounding scheme along with the best of a multipoint grounding scheme using a combination of AC & DC termination for grounding. At low frequencies, usually below 1 MHz, the capacitors are not low enough impedance to allow significant AC or impulsive current to flow in the ground system. As the noise frequency or frequencies increase, the impedance of the capacitor decreases, thereby effectively shorting the subsystem chassis to ground or the larger system chassis. The capacitor is bypassing current flow on the Single Point DC Ground.

This scheme requires the capacitor to be a very good high-frequency capacitor (like radial lead ceramics or surface mount technology, SMT, ceramics). In addition, the “loop area” (defined by the mounting of the capacitor) of the ground/reference termination must be small. If the ground loop or shield termination loop are large in area or length, the inductance of the AC coupled path becomes too high to be effective, thereby decoupling the capacitor and effectively removing the desired AC short.

The hybrid grounding system attempts to keep noise frequencies lower than 1 MHz local by providing a single point ground that is low resistance and is also high impedance and keep noise frequencies higher than 1MHz local by low impedance but high resistance multipoint connections to the ground system reference potential of zero volts difference between physically separated locations of subsystems. AC termination of shields and multipoint ground connections provides the low impedance ground system, and the single point low resistance conductors provide the single point grounding required for the full spectrum of interference noise containment local to their sources.

Using a hybrid grounding scheme is required to meet both Safety and EMC compliance concerns.

Released

Ground Noise Interference
Transient ground bounce is the most common ground interference noise. Transient ground bounce is caused when a nearby lightning strike equalizes its charge, or when high current switched inductive loads dump their stored energy.

The voltage potential of the local ground is raised or lowered from zero volts by the high energy load dump or lightning charge equalization, as a current flows in the lowest impedance path across the various ground impedance connections and conductors typically provided by various Safety Ground schemes and systems.

Continuous and modulated sinusoidal ground interference potentials up to about 1-10 MHz are created by physically separated earth connections or references that have an impedance that resists the flow of current.

A galvanic, conductor-based ground system may connect the different potentials at separated locations together and flow interference noise current in the grounding system. Sinusoidal ground interference potentials may also be present at difference potentials across the various locations of electrical and electronic subassemblies in the system due to energy transfer. Similar to transient ground bounce, high current in low impedance grounds, or high voltage in one ground that is high impedance with respect to another ground, cause potential differences and interference noise current to flow.

A significant potential difference in grounds (protective earth or chassis grounds) generally arises when the shortest physical distance between protective earth connection points is greater than about 30 m (100 ft), but this may happen any time there is a significant enough inductance and/or resistance in the conductors with interference noise current flowing in them. Potential differences in the grounding system are also created when significant currents are flowing in the low impedance conductors.

If energy dissipation is large, the distance of ground potential differences may be reduced to as little as 3 m (10 ft). An example is multi-gigawatt power generation plant where it may be as little as 0.75m (~2.5 ft.) between significantly different potentials of the ground near the generator (a step distance for safety of personnel may need to be set).

Ground noise interference signals less than about 1 MHz frequency content reduce path energy flow by breaking and isolating ground points to a single point and maintaining resistance of the conductors as close to zero ohms as possible.

Ground noise interference signal potentials above 1 MHz are reduced by maintaining the impedance of the conductors as close to zero Ohms and zero Henries as possible.

Both reductions are accomplished by keeping return currents returning to the noise source through the shortest possible path. The shortest path is the lowest impedance or resistance ground return structure.

10.3.4. Cable Entry and Exit (Transition) Locations

The cabinet must provide a shield termination point for cables as they enter or leave the enclosure. Shielded I/O shields must be either AC or DC terminated directly to the cabinet (earth ground) at the entry to the cabinet.

- Cable shield termination hardware must be installed at cable entry/exit points.
- Direct cable shield terminations must be electrically connected to structural frame (<2.5 mΩ), and shall allow direct grounding to PE or IE and/or AC (capacitive) grounding of cable shields with 4.4 nano-farad to 10 nF low inductance capacitors per each signal shield.
    - Multiple shields in parallel may use smaller capacitance values at the AC shield termination.
        - **Example**: Three parallel shields terminated at the cabinet entrance/exit point may use 3x3.3nF capacitors from a common shield bus to the cabinet ground. However, 10 nF is expected to be the minimum capacitance from the shield bus to cabinet ground.
    - Shield capacitors, where remote PE is on the far end of the shield and local PE or IE is in the cabinet containing the XT Digital control to terminate the capacitor shield, should be rated at great than or equal to 1500 VDC standoff voltage.

Released

- If shields are AC coupled at both ends, remote and local, shield capacitors should be rated at great than or equal to 750 VDC standoff voltage.
- Capacitors used for AC shield termination must be less than 20 mΩ ESR.
- Low inductance capacitors less than have less than 10 picoHenry inductance due to ESL at the highest usable frequency. This equates to 80 mΩ for the magnitude of inductive impedance on the capacitor at 1275 MHz.
  - External shield capacitors typically only need to be rated for 100-500 MHz.

10.3.5. Equipment Zoning (Segregation)

Separate the equipment inside the cabinet into areas:

- Analog equipment area
- Discrete I/O equipment areas
- Shielded I/O area
- Un-shielded I/O area
- Power area
- Light Industrial compliant equipment area
- Monitor/keyboard/pointing device (HMI if applicable)
- Other equipment area

Maintain a minimum of 152 mm (6 inches) of separation between areas, as possible.

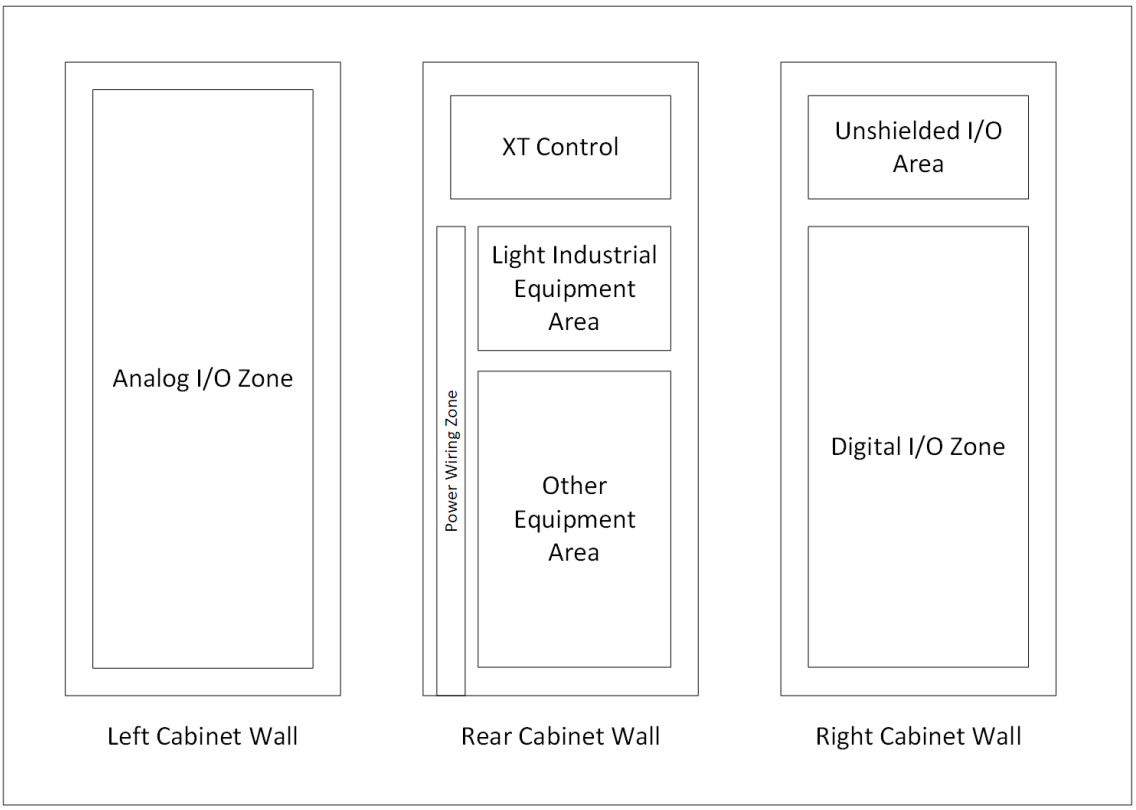

Figure 10-5. Zoning Example

Released

10.3.6. Input Power Routing and Filtering

- Input power must enter the cabinet and be routed separately from all other circuits.
- Input power must route directly to controls that are industrial compliant.
- Input power that must route to controls that are light Industrial compliant must be filtered with a minimum of 10-20 dB filtering.
- Input power that must be routed near other cabling will be filtered prior to the point they are on a common path and before leaving the cabinet (added power line filter).
- In harsh EMC environments, an additional power line filter must be used to segregate the power to MicroNet XT Digital Control from the equipment making it a harsh EMC environment.

IMPORTANT

Residential, commercial, and light industrial equipment is defined as equipment that is designed and tested to comply with EN61000-6-1 or EN61000-6-3. Such equipment needs extra care when installed in industrial environments defined by EN 61000-6-2 and EN 61000-6-4.

10.3.7. Analog I/O Routing and Shield Termination

Field I/O Module (Analog Driver, etc.) in Cabinet

- Use shielded cable from MicroNet XT module to field I/O module per I/O point.
- Locate field I/O module shield termination as close to I/O cable entry point on the module as possible.
- Follow the best practices indicated in Figure 10-4. Cable Shield Termination Diagram Examples
- Locate I/O module away from unshielded discrete areas (> 152 mm / 6 inches)
    - See Figure 10-5.

Field I/O Cable with I/O Module (Analog Driver, etc.) in Cabinet

- Route I/O cable against cabinet metal wall from entry point to I/O module.
- Ground I/O cable shield direct to cabinet at entry point.
    - If over braid shielded, ground over braid shield to cabinet - connect inner braid shields at I/O module termination point. The inner braid must still be directly grounded to earth at one point along the cable length, preferably at the MicroNet XT Digital Control I/O point.
    - If single shield, ground shield to cabinet.
- If field I/O cable is grounded direct (DC coupled) at the remote end of cable, ground the I/O cable shield capacitively at the cable's cabinet entry or exit point.
- I/O wire/cable shield ground at the I/O module must be the same type as at the cable entry point into cabinet, and it should be direct or converted to AC termination.

10.3.8. Shielded Discrete I/O Routing and Shield Termination

MicroNet XT Digital Control I/O Module in Cabinet

- Use shielded cable from MicroNet XT module to field I/O module
- Ground cable shield directly at MicroNet XT module and field I/O module
- Locate I/O module as close to field I/O cable entry or exit point as possible
- Locate I/O module away from analog I/O areas (> 152 mm / 6 inches)
- Locate I/O module away from areas with unshielded discrete I/O (>152 mm / 6 inches)

Field I/O Cable with Field I/O Module in Cabinet

- Route I/O cable against cabinet metal wall/structure from cabinet entry point to I/O module.
- If I/O cable is shielded, ground the I/O cable shield directly to cabinet at entry or exit point.
    - If over braid shielded, ground over braid shield to cabinet - connect inner braid shields at I/O module termination point. The inner braid must still be directly grounded to earth at one point along the cable length, preferred at the XT Digital Control I/O point.
    - If single shield, ground shield to cabinet
- If field I/O cable is grounded direct (DC coupled) at remote end of cable, ground the I/O cable shield capacitively at the cable's cabinet entry or exit point.
- I/O wire/cable shield ground at the I/O module must be the same type as at cable entry point into cabinet, and it should be direct or converted to AC termination.

Released

Field I/O Cable without Field I/O Module in Cabinet, Remote Located

- Ground I/O cable shield, direct, at the I/O module
  - If over braid shielded, ground over braid shields to cabinet - connect inner braid shields at I/O module termination point. The Inner braid must still be directly grounded to earth at one point.
  - If single shield, ground shield to earth at the I/O module
- If field I/O cable is grounded direct (DC coupled) at remote end of cable, ground the I/O cable shield capacitively at the I/O module.
- I/O cable shield ground at the I/O module must be the same type as at cable entry point into cabinet, and it should be direct connected.

10.3.9. Unshielded I/O

Discrete I/O is the only I/O type that might be able to be unshielded, for more details on this requirement please see the Discrete I/O MicroNet XT Module section (power is not considered signal I/O addressed).

Field I/O Module in Cabinet

- Use shielded cable from MicroNet XT module to I/O module.
- Connect cable reference potential wire direct at MicroNet XT module and I/O module.
- Locate I/O module as close to field I/O cable entry point as possible.
- Locate I/O module away from sensitive analog areas (>152 mm / 6 inches) or other types of unshielded I/O.

Field I/O Cable with I/O Module in Cabinet

- Route I/O cable against cabinet metal wall from entry point to I/O module
- Do not let other cable types within 300 mm (12 inches) of unshielded discrete I/O cables if they are parallel for > 61 cm (2 feet)
- Do not let other cable types within 152 mm (6 inches) of unshielded discrete I/O cables if they are parallel for less than 61 cm (2 feet)
- Limit length of unshielded I/O cable inside the cabinet. Any length over 61 cm (2 feet) is too long.
- If lengths greater than 61 cm (2 feet) are required, special considerations should be used to separate this unshielded wiring from other circuits and minimize electromagnetic RF emissions.

Field I/O Module not in Cabinet

- Route cable from MicroNet XT module to I/O module with cable against cabinet metal wall.
- Ground MicroNet XT module to I/O module cable shield at entry or exit point of the cabinet and to the field I/O module.
- I/O wire/cable shield ground at the I/O module must be the same type as at cable entry point into cabinet, and it should be direct or converted to AC termination.

10.3.10. Ethernet I/O Connections

- Use shielded twisted pair (STP) category 5e or better Ethernet cable.
- Route Ethernet cable away from all other internal cabling and external I/O cabling.
- Ground internal Ethernet cable at the CPU card and at the entry point to the cabinet.
  If external Ethernet cable is grounded direct at remote end of cable, ground the external Ethernet cable shield capacitively.

10.3.11. Connection of Cabinet to Installation Ground

- Ensure the cabinet enclosure is electrically grounded to the plant ground system. Use the largest conductor possible. Follow plant guidelines.

10.3.12. Equipment Bonding

- DIN rail shall be electrically connected to structural frame (<2.5 mΩ) once every 30 cm (12 inches).
- Use a minimum of two screws to bond a DIN rail to cabinet frame.
- Equipment chassis shall be electrically connected to structural frame (<2.5 mΩ).

Released

10.3.13. Safety Ground Wire Installation

- Safety wires shall be routed against the grounded cabinet structure. Locate safety ground wire 15 cm (6 inches) from unshielded cabling, 77 mm (3 inches) from internal shielded cabling, and 15 cm (6 inches) from any I/O cabling exiting the cabinet.
- Safety ground/protective earth wire should be routed from power input connections to the source of power. These wires should be routed with the power wires. Ideally, power wires should be minimally twisted, as they should be routed in direct contact with each other and bundled per input group.

10.3.14. Installation of Other Equipment, Fans, Meters, etc.

Shield Termination Schemes Note: See Application Note 51204 for this information.

10.4. Application Information for EMC Cabinet/Enclosure

10.4.1. EMC Cabinet Indication

The MicroNet XT Control is required to be installed into a standard metal cabinet or enclosure. As the system grows beyond a single controller, is used in a harsh EMC environment, or used in an area where equipment in the application environment is sensitive to electric, magnetic, or electromagnetic energy, it is recommended to use an EMC rated cabinet.

The cabinet/enclosure and all of its sub-components, frame, and panels need to be bonded together at PE or IE (Instrumentation Earth) potential.

Military Marine systems and similar must use an EMC cabinet, double shielding cables, and power line filtering when implemented.

Implementation of more than two MicroNet XT Control Systems may drive the use of an EMC cabinet. Implementation beyond two MicroNet XT control systems, installation with high current Actuator Drives, or installation with high voltage Ignitor Controllers require the use an EMC Cabinet.

- The IO modules available have been qualified to be at least three of one type, providing margin to emission limits in a standard cabinet. An EMC cabinet may be used any time, but is not required for multiple modules of the same type within any system.
- The future of the control holds the use of multiple controllers or expansion racks, which may have more than two power supplies or two CPU modules. The CPU and power supply are not currently qualified to have more than two in any system; future expansion will be designed to accommodate more than two CPUs in one system or more than one system in a cabinet. At this time, an EMC cabinet is required for more than two supplies or two CPU modules. This will be the case until qualification and investigation of multiple controllers is complete.

Harsh EMC environments are not limited to the examples below, but the following is a conceptual guideline:

- Near the prime mover and/or generator, not segregated by control room or a distance greater than 30 meters (100 feet) from the perimeter of the system.
  - System: Prime mover and generator, compressor, or similar load or process.
- High Voltage AC power generation and transmission.
  - High Voltage: Transmission lines, including sourced by step up transformer, from the generator or in the substation that are greater than or equal to 36 kV. Additionally, generator voltage at greater than or equal to 1000 V_{RMS}.
- High current and/or high voltage electrical actuation and drivers, continually operated ignition systems, commutated power generators/motors, or similar sub systems of the process system present on the same power bus or within the perimeter of system.

EMC environments are not limited to the examples below, but the following is a conceptual guideline:

- Emergency ship to shore transmitter/receiver services in commercial steel sea going vessels
  - The MicroNet XT is currently designed so the emergency ship to shore band is protected.
- Metrology equipment, Thermocouples, and similar.

Released

MicroNet XT emissions levels are designed to not have issues with typical equipment; however, very sensitive receivers or measurement equipment will often need greater protection than is afforded by meeting the intended initial limitations on emissions.

10.4.2. Shields and Grounding

There is no expansion of the requirement listed for a standard cabinet.

10.4.3. MicroNet XT Module Cable Shield Grounding

There is no expansion of the requirement listed for a standard cabinet.

10.4.4. Cabinet Structural Grounding

- The cabinet needs to be a six-sided EMI shielded enclosure. The interior surfaces must be conductive and coated with corrosion protection treatments.
- The enclosure floor and/or top must provide holes for cable entry; only the floor or top panels may be used for EMC cabinets.
    - Top and bottom cable entry areas must be restricted in size. The largest dimension of any aperture (hole) should be no greater than 152 mm (6 inches). This is particularly important when RF transmitters, like push to talk radios or cell phones, can be located near the cable access areas.
- Bond the cabinet frame and mounting areas to each other (grounded together).
- All MicroNet XT chassis mounting screws (#8-32 M4) should be installed to properly ground the chassis to the mounting plate.
- Frame shall be electrically connected at each structural interface (<2.5 mΩ).
- Mounting plates shall be electrically connected to structural frame (<2.5 mΩ).
    - Mount at 6 places minimum — 4 corners + 2 mid-points, 8 places preferred.
- Cabinet doors must be electrically connected to the main structural frame (<2.5 mΩ) and must be mounted using conductive EMI gaskets along the length of the interface perimeter.
- Cover panels shall be electrically connected to structural frame (<10 mΩ) and must be mounted using conductive EMI gaskets along the length of the interface perimeter.
- Floor and top must be electrically connected to structural frame (<2.5 mΩ) and must be mounted using conductive EMI gaskets along the length of the interfaces.
- DIN rails must be electrically connected to structural frame (<2.5 mΩ).
    - Once every 300 mm (12 inches) but must use a minimum of two screws to bond a DIN rail to cabinet frame or mounting panels.

10.4.5. Cable Entry or Exit (Transition) Locations

There is no expansion of the requirement listed for a standard cabinet.

10.4.6. Equipment Zoning (Segregation)

There is no expansion of the requirement listed for a standard cabinet.

10.4.7. Input Power Routing and Filtering

There is no expansion of the requirement listed for a standard cabinet.

Released

10.5. Replacement Procedures

10.5.1. Safety Considerations

WARNING

Refer to the special conditions for safe use, in the Regulatory Compliance chapter.

WARNING

Lockout/Tagout LOTO

Ensure that personnel are fully trained on LOTO procedures prior to attempting to replace or service equipment on a "live" running engine. All safety protective systems (overspeed, over temperature, overpressure, etc.) must be in proper operational condition prior to the start or operation of a running engine. Personnel should be equipped with appropriate personal protective equipment to minimize the potential for injury due to release of hot hydraulic fluids, exposure to hot surfaces and/or moving parts, or any moving parts that may be activated and are located in the area of control of the unit.

10.5.2. Replacing a MicroNet XT Module

Each CPU and I/O module contains a status LED that annunciates the health of the module. It can illuminate either GREEN or RED.

A green LED indicates the module is healthy and operational.
A red LED indicates the module is in IOLOCK, initializing, in HALT mode, or has a fault.

A flashing status LED indicates that a certain module failure has occurred and is used by factory technicians to locate module faults. When a module fault is detected, its outputs are disabled or de-energized.

During initialization of the module, which occurs after every CPU reset, the CPU turns the status LED to red. The CPU then tests each I/O module using diagnostic routines built into the software. If the diagnostic test is not passed, the status LED remains red or blinks. If the test is successful, the status LED turns to green. If after the diagnostics and initialization have been run, the status LED on the module is still illuminated red, then the module may be located in the wrong slot, be held in IOLOCK or HALT mode by the CPU, or be faulty.

Note that all modules have tamper detection— removing or damaging the seal on any module will void the warranty.

MicroNet XT Module Replacement Procedure:

1. **Warnings:** Read all warnings at the beginning of this volume before replacing any module.
2. If the control is running and on-line, use the Engineering Workstation to verify that any backup modules are running without faults.
3. **Remove power:** If possible, remove power from the chassis and continue at step 5.
4. **Halt the module:**
   a. For CPUs and RTNs: If power cannot be removed, issue a module reset immediately before removing it from the chassis using the CPU reset button on the front face plate. This notifies the module that it will be removed and provides a graceful failover to another healthy Control CPU or Remote RTN module if available.
   b. For I/O Modules: If power cannot be removed, HALT the module in the application software and verify the status LED goes red before unseating the module.
5. **Unseat the module:** Before removing any connectors or cables, unscrew the module's captive-screw fasteners (one at the top of the module and the other at the bottom) and unseat the module.
6. **Partially remove the module and disconnect cables:** Pull the module straight out until it is approximately 25 mm (1 inch) from the backplane. Disconnect the I/O cables from the module and secure the ends to avoid damage or the shorting of pins. The module connectors use flange screws to secure them to the module.

Released

7. **Fully remove the module:** Remove the module by pulling it straight out and putting it into a conductive plastic bag. (Woodward P/N 4951-041).
8. **Inspect and partially install module:** Prior to installing a replacement module, verify that all connector pins are parallel and straight. Install the replacement module by aligning the top and bottom module brackets in the chassis card guides and pushing the module straight in until it is approximately 25 mm (1 inch) from the backplane. **Do not make contact with the chassis backplane mating connectors**.
9. **Delay time:** If the same module is to be removed and re-installed, wait a minimum of 30 seconds after removal before re-installing the module.
10. **Re-connect the cables:** Connect the I/O cables to the module. The module connectors use flange screws. Verify that the I/O cables are connected to the correct cable connector module, and connectors are installed in the correct positions (J1 #1-36 on top, J2 #37-72 on bottom).
11. **Fully insert the I/O module:** With even pressure exerted at the top and bottom of the module, in one continuous motion, fully seat the module into the backplane.

IMPORTANT

If resistance is encountered when installing a module, do not force the module. Remove the module and check the connectors for bent contacts or foreign objects. Also check to ensure that the module screws are fully retracted. Forcing a module into place may break the connector or bend the securing screws.

Note: Ensure that the module is fully inserted by verifying that the faceplate is flush with the other modules. For a new CPU module, a large amount of force can be required to properly seat the module.

12. Secure the module screws.
13. If power was removed, reapply power.
14. Re-start the application as required using AppManager
15. Verify that the replacement MicroNet XT module is working correctly.

Once the module is properly installed, the module fault LED will be illuminated until the module is re-initialized by the control. The control performs module diagnostic tests for a few seconds, and if all tests are passed, re-initializes the module and the status LED will turn green.

IMPORTANT

If the module's fault LED does not turn off after the module has been installed for at least one minute, it may be necessary to re-seat the module more firmly. Follow the instructions above for reseating a module.

Released

Chapter 11.
Product Support and Service Options

11.1. Product Support Options

If you are experiencing problems with the installation, or unsatisfactory performance of a Woodward product, the following options are available:

- Consult the troubleshooting guide in the manual.
- Contact the manufacturer or packager of your system.
- Contact the Woodward Full Service Distributor serving your area.
- Contact Woodward technical assistance (see “How to Contact Woodward” later in this chapter) and discuss your problem. In many cases, your problem can be resolved over the phone. If not, you can select which course of action to pursue based on the available services listed in this chapter.

OEM or Packager Support: Many Woodward controls and control devices are installed into the equipment system and programmed by an Original Equipment Manufacturer (OEM) or Equipment Packager at their factory. In some cases, the programming is password-protected by the OEM or packager, and they are the best source for product service and support. Warranty service for Woodward products shipped with an equipment system should also be handled through the OEM or Packager. Please review your equipment system documentation for details.

Woodward Business Partner Support: Woodward works with and supports a global network of independent business partners whose mission is to serve the users of Woodward controls, as described here:

- A **Full Service Distributor** has the primary responsibility for sales, service, system integration solutions, technical desk support, and aftermarket marketing of standard Woodward products within a specific geographic area and market segment.
- An **Authorized Independent Service Facility (AISF)** provides authorized service that includes repairs, repair parts, and warranty service on Woodward's behalf. Service (not new unit sales) is an AISF's primary mission.

A current list of Woodward Business Partners is available at:
https://www.woodward.com/en/support/industrial/service-and-spare-parts/find-a-local-partner

11.2. Product Service Options

The following factory options for servicing Woodward products are available through your local Full-Service Distributor or the OEM or Packager of the equipment system, based on the standard Woodward Product and Service Warranty (Woodward North American Terms and Conditions of Sale 5-09-0690) that is in effect at the time the product is originally shipped from Woodward or a service is performed:

- Replacement/Exchange (24-hour service)
- Flat Rate Repair
- Flat Rate Remanufacture

Released

Replacement/Exchange: Replacement/Exchange is a premium program designed for the user who is in need of immediate service. It allows you to request and receive a like-new replacement unit in minimum time (usually within 24 hours of the request), providing a suitable unit is available at the time of the request, thereby minimizing costly downtime. This is a flat-rate program and includes the full standard Woodward product warranty (Woodward North American Terms and Conditions of Sale 5-09-0690).

This option allows you to call your Full-Service Distributor in the event of an unexpected outage, or in advance of a scheduled outage, to request a replacement control unit. If the unit is available at the time of the call, it can usually be shipped out within 24 hours. You replace your field control unit with the like-new replacement and return the field unit to the Full-Service Distributor.

Charges for the Replacement/Exchange service are based on a flat rate plus shipping expenses. You are invoiced the flat rate replacement/exchange charge plus a core charge at the time the replacement unit is shipped. If the core (field unit) is returned within 60 days, a credit for the core charge will be issued.

Flat Rate Repair: Flat Rate Repair is available for the majority of standard products in the field. This program offers you repair service for your products with the advantage of knowing in advance what the cost will be. All repair work carries the standard Woodward service warranty (Woodward North American Terms and Conditions of Sale 5-09-0690) on replaced parts and labor.

Flat Rate Remanufacture: Flat Rate Remanufacture is very similar to the Flat Rate Repair option with the exception that the unit will be returned to you in “like-new” condition and carry with it the full standard Woodward product warranty (Woodward North American Terms and Conditions of Sale 5-09-0690). This option is applicable to mechanical products only.

11.3. Returning Equipment for Repair

If a control (or any part of an electronic control) is to be returned for repair, please contact your Full-Service Distributor in advance to obtain Return Authorization and shipping instructions.

When shipping the item(s), attach a tag with the following information:
- Return authorization number
- Name and location where the control is installed
- Name and phone number of contact person
- Complete Woodward part number(s) and serial number(s)
- Description of the problem
- Instructions describing the desired type of repair

Packing a Control

Use the following materials when returning a complete control:
- Protective caps on any connectors
- Antistatic protective bags on all electronic modules
- Packing materials that will not damage the surface of the unit
- At least 100 mm (4 inches) of tightly packed, industry-approved packing material
- A packing carton with double walls
- A strong tape around the outside of the carton for increased strength

NOTICE

To prevent damage to electronic components caused by improper handling, read and observe the precautions in Woodward manual 82715, *Guide for Handling and Protection of Electronic Controls, Printed Circuit Boards, and Modules*.

Released

11.4. Replacement Parts

When ordering replacement parts for controls, include the following information:

- The part number(s) (XXXX-XXXX) that is on the enclosure nameplate
- The unit serial number, which is also on the nameplate

11.5. Engineering Services

Woodward offers various Engineering Services for our products. For these services, you can contact us by telephone, by email, or through the Woodward website.

- Technical Support
- Product Training
- Field Service

Technical Support is available from your equipment system supplier, your local Full-Service Distributor, or from many of Woodward's worldwide locations, depending upon the product and application. This service can assist you with technical questions or problem solving during the normal business hours of the Woodward location you contact. Emergency assistance is also available during non-business hours by phoning Woodward and stating the urgency of your problem.

Product Training is available as standard classes at many of our worldwide locations. We also offer customized classes, which can be tailored to your needs and can be held at one of our locations or at your site. This training, conducted by experienced personnel, will ensure that you will be able to maintain system reliability and availability.

Field Service engineering on-site support is available, depending on the product and location, from many of our worldwide locations or from one of our Full-Service Distributors. Field engineers are experienced with Woodward products and much of the non-Woodward equipment with which our products interface.

For information on these services, please contact one of the Full-Service Distributors listed at: **https://www.woodward.com/en/support/industrial/service-and-spare-parts/find-a-local-partner**

11.6. Contacting Woodward's Support Organization

For the name of your nearest Woodward Full-Service Distributor or service facility, please consult our worldwide directory at **https://www.woodward.com/support**, which also contains the most current product support and contact information.

You can also contact the Woodward Customer Service Department at one of the following Woodward facilities to obtain the address and phone number of the nearest facility at which you can receive information and service.

Products Used in Electrical Power Systems

Facility	Phone Number
Brazil	+55 (19) 3708 4800
China	+86 (512) 8818 5515
Germany	+49 (711) 78954-510
India	+91 (124) 4399500
Japan	+81 (43) 213-2191
Korea	+82 (51) 636-7080
Poland	+48 (12) 295 13 00
United States	+1 (970) 482-5811

Products Used in Engine Systems

Facility	Phone Number
Brazil	+55 (19) 3708 4800
China	+86 (512) 8818 5515
Germany	+49 (711) 78954-510
India	+91 (124) 4399500
Japan	+81 (43) 213-2191
Korea	+82 (51) 636-7080
United States	+1 (970) 482-5811

Products Used in Industrial Turbomachinery Systems

Facility	Phone Number
Brazil	+55 (19) 3708 4800
China	+86 (512) 8818 5515
India	+91 (124) 4399500
Japan	+81 (43) 213-2191
Korea	+ 82 (51) 636-7080
Poland	+48 (12) 295 13 00
United States	+1 (970) 482-5811

Released

11.7. Technical Assistance

If you need to contact technical assistance, you will need to provide the following information. Please write it down here before contacting the Engine OEM, the Packager, a Woodward Business Partner, or the Woodward factory:

General

Your Name

Site Location

Phone Number

Fax Number

Prime Mover Information

Manufacturer

Turbine Model Number

Type of Fuel (gas, steam, etc.)

Power Output Rating

Application (power generation, marine, etc.)

Control/Governor Information

Control/Governor #1

Woodward Part Number & Rev. Letter

Control Description or Governor Type

Serial Number

Control/Governor #2

Woodward Part Number & Rev. Letter

Control Description or Governor Type

Serial Number

Control/Governor #3

Woodward Part Number & Rev. Letter

Control Description or Governor Type

Serial Number

Symptoms

Description

If you have an electronic or programmable control, please have the adjustment setting positions or the menu settings written down and with you at the time of the call.

Released

Appendix A. Environmental Specifications

Power Supply Input Operating Voltage	24VDC (18 – 36 VDC)
Power Supply Input Power	421W max @ 18Vdc 416W max @ 24Vdc 418W max @ 36Vdc
Operating Temperature	-40 to +70 °C (-40 to +158 °F), still air, no external heat loads
Storage Temperature	-40 to +85 °C (-40 to +185 °F) Component life is adversely affected by high temperature, high humidity environments. Room temperature storage is recommended for long life. If unit is to be stored for a long period of time, operating power must be applied for a few hours at least once every 18–24 months.
Humidity	Woodward H2 - 5 cycles 25–60 °C at 95% RH non-condensing (one cycle per day), powered on for the purpose of non-condensing
Vibration	RV5 Random Vibration limits of (control room): 1.04 Grms (10-500 Hz), 2 Hrs/axis SV1 Sinusoidal Vibration limits of (control room): 0.7 G, 2 mm (3-100 Hz).
Shock	15 G peak min, 11 mS half-sine pulse (Procedure per MIL-STD 202H, Method 213B basic test J)
Air Quality: Corrosive Atmospheric Gases	Pollution Degree 2 (IEC 60664-1) Sulfur resistant conformal coat for ISA-S71.04-1985, Level G2 installations Tolerant of H2S and SO2 sulfur exposure per IEC 721-3-3-1994, Environmental class 3C2 (Urban Industrial, Heavy Traffic). Refer to Woodward Application Note 51530 for more details.
Altitude (max.)	4000 meters
Installation Overvoltage Rating	Category II
Ingress Protection	In accordance with the requirements of IP20 as defined in IEC 60529, unless mounted in a protective enclosure.
Weight	MicroNet XT 14 slot Chassis with all modules populated will be approximately (varies with module set, and may require 2 people to lift safely): 22 kg (48 lb.)
Dielectric Withstand	850 Vrms from power input to chassis AC.
Electro-Magnetic Compatibility (EMC)	EMC is considered for Industrial, the Commercial Marine Steel Vessel Below Deck, and Military Steel Surface Ship Below Deck (Navy) as Commercial Off the Shelf (COTS) equipment environments. (Naval applications require additional EMC mitigation implementation.) EMC environment conditions are represented by immunity tests within IEC 61000-6-2, IEC 61000-6-5, & IACS UR E10 Tests 13-18 and emission tests within IEC 61000-6-4, CISPR 11 & IACS UR E10 Tests 19-20. In addition, select Woodward tests based on deviations to MIL-STD-461 & ISO 11452 series are also deemed applicable.

Released

EMC Immunity — Test or analysis evaluation in the 50 Hz to 18 GHz range.

IACS UR E10 Test 15 Conducted Low Frequency Immunity 50Hz-150 kHz
50Hz to 10 kHz ≤ 2W up to 10% U_{nom} (3.6V_{RMS})
50Hz to 5 kHz ≤80W in 0.5Ω up to 2V_{RMS}
5 kHz to 150 kHz ≤ 80W-0.9W in 0.5Ω to 2.0-0.067V_{RMS}
IEC 61000-4-16 Conducted Low Frequency Immunity 50Hz-150 kHz
50 or 60 Hz, 100 V_{RMS} in 150Ω Loop for 1 second (Power Only)
IEC 61000-4-16 Conducted Low Frequency Immunity 50Hz-150 kHz
50 to 150 Hz, 10 to 1 V_{RMS} in 150Ω Loop
150 Hz to 1.5 kHz, 1 V_{RMS} in 150Ω Loop
1.5 kHz to 15 kHz, 1 to 10 V_{RMS} in 150Ω Loop
15 kHz to 150 kHz, 10 V_{RMS} in 150Ω Loop
Woodward Bulk Current Injection 10kHz to 200 MHz
10 kHz to 1 MHz Positive Sloped Limit 43 to 83 dBµA, 1 kHz 80% AM
1 to 30 MHz Flat Limit 83 dBµA, 1 kHz 80% depth AM
30 to 200MHz Negative Sloped Limit 83 to75 dBµA, 1 kHz 80% AM
IEC 61000-4-6 Conducted RF Immunity 150 kHz - 80 MHz
0.150-80 MHz, 10 V_{RMS} +1 kHz 80% depth AM in 300Ω Loop, ≤66.7 mA
IACS UR E10 Test 16 Conducted RF Immunity 150 kHz - 80 MHz
0.150-80 MHz, 10 V_{RMS} +1 kHz 80% depth AM in 300Ω Loop, ≤66.7 mA
IEC 61000-4-3 Electromagnetic Field Immunity 80-6000 MHz
80 MHz to 6 GHz, 10 V_{RMS} +1 kHz 80% depth AM
IACS UR E10 Test 16 Conducted RF Immunity 150 kHz - 80 MHz
80 MHz to 6 GHz, 10 V_{RMS} +1 kHz 80% depth AM
Woodward Electromagnetic Field Immunity 6-18 GHz Test & Extrapolation
6-12 GHz, 10 V_{RMS} +1 kHz 80% depth AM (3dB Antenna Beamwidth)
12-18 GHz, 10 V_{RMS} +1 kHz 80% depth AM (3dB Antenna Beamwidth)
IEC 61000-4-2 Electrostatic Discharge (ESD) to MicroNet XT
Direct Contact Discharge at ±2, ±3, ±4, & ±4.5 kV, 20 pulses per polarity
*ESD mitigation required to access the enclosure and the MicroNet XT
IEC 61000-4-2 ESD to Cabinet/System Enclosure
Direct Contact Discharge at ±2, ±4, ±6, & ±8 kV, 20 pulses per polarity
Direct Air Discharge at ±2, ±4, ±8, & ±15kV, 20 pulses per polarity
IACS UR E10 Test 13 ESD to MicroNet XT
Direct Contact Discharge at ±2, ±3, ±4, & ±4.5 kV, 20 pulses per polarity
*ESD mitigation required to touch the MicroNet XT
IACS UR E10 Test 13 ESD to Cabinet/System Enclosure
Direct Contact Discharge at ±2, ±4, & ±6 kV, 20 pulses per polarity
Direct Air Discharge at ±2, ±4, & ±8 kV, 20 pulses per polarity
IEC 61000-4-4 Electrical Fast Transient / Burst Immunity (EFT)
5ns t_r / 50 ns $t_{50\%-50\%}$, 5 & 100 kHz 75 pulse burst on 300ms period, 5 min
Power ±2 kV and Singal IO Cables ±1 kV (Select signal IO at ±2 kV)
IACS UR E10 Test 17 Electrical Fast Transient / Burst Immunity (EFT)
5ns t_r / 50 ns $t_{50\%-50\%}$, 5 & 100 kHz 75 pulse burst on 300ms period, 5 min
Power ±2 kV and Singal IO Cables ±1 kV (Select signal IO at ±2 kV)
IEC 61000-4-5 Surge Transient Pulse, 5 pulses/polarity, 1pulse/minute
1.2µs t_r / 50 µs $t_{50\%-50\%}$ open circuit, 8µs t_r / 20 µs $t_{50\%-50\%}$ Short circuit
Power IO: ±2 kV Line-PE. ±1 kV Line-Line.
Singal IO: ±1 kV Line-PE
IACS UR E10 Test 18 Surge Transient Pulse, 5 pulses/polarity, 1pulse/minute
1.2µs t_r / 50 µs $t_{50\%-50\%}$ open circuit, 8µs t_r / 20 µs $t_{50\%-50\%}$ Short circuit
DC Power IO: ±1 kV Line-PE. ±0.5 kV Line-Line.
IEC 61000-4-8 Power Frequency Magnetic Field Immunity
100 (30) A/m (Continuous), 1 kA/m for 1 second
IEC 61000-4-17 Rectifier Ripple on DC Power Immunity
10 % $U_{nominal}$
IEC 61000-4-29 Voltage Dips and Voltage Interruptions on DC Pwr Immunity
70 % U_T, 100ms, 40 % U_T, 100ms, 0 % U_T, 50ms

Released

EMC Emissions — Test or analysis evaluation in the 50 Hz to 18 GHz range.

Woodward Power Conducted Current Emissions
30 Hz to 2.6 kHz: 95 dBµA+20Log10($I_{DC}/3$)dB Pk
2.6 to 30 kHz: 95 to 60.5 dBµA+20Log10($I_{DC}/3$)dB Pk

IACS UR E10 Test 20 Conducted Power Conducted Voltage Emissions
10 to 150 kHz: Negative Sloped Limit 120 to 69 dBµV QP
150 to 500 kHz: Flat Limit 79 dBµV QP & 66 dBµV Ave
500 kHz to 30 MHz: Flat Limit 73 dBµV QP & 60 dBµV Ave

IEC 61000-6-4 Conducted Power Voltage Emissions
150 to 500 kHz: Flat Limit 89 dBµV QP & 76 dBµV Ave
500 kHz to 30 MHz: Flat Limit 83 dBµV QP & 70 dBµV Ave

IEC 61000-6-4 Conducted Comm Cable CM Conducted Voltage or Current
150 to 500 kHz: Negative Sloped Limit 97-87 dBµV QP & 84-74 dBµV Ave
500 kHz to 30 MHz: Flat Limit 87 dBµV QP & 74 dBµV Ave
-or-
150 to 500 kHz: Negative Sloped Limit 53-43 dBµA QP & 40-30 dBµA Ave
500 kHz to 30 MHz: Flat Limit 43 dBµV QP & 30 dBµV Ave

IACS UR E10 Test 19 Radiated Magnetic to Electric Field Emissions @ 3m
150 kHz to 30 MHz Negative Sloped Limit 80 to 50 dBµV/m QP

IACS UR E10 Test 19 Radiated Electric Field Emissions 3m
30-100 MHz Negative Sloped Limit 60 to 54 dBµV/m QP
100-1000 MHz Flat Limit 54 dBµV/m QP
1000-6000 MHz Flat Limit 54 dBµV/m AVE

IEC 61000-6-4 Radiated Electric Field Emissions 3m
30-230 MHz Flat Limit 50 dBµV/m QP
230-1000 MHz Flat Limit 57 dBµV/m QP
1000-3000 MHz Flat Limit 76 dBµV/m PK & 56 dBµV/m AVE
3000-6000 MHz Flat Limit 80 dBµV/m PK & 60 dBµV/m AVE

Woodward Radiated Magnetic Field Emissions @ 7 cm
30 to 450 Hz: Negative Sloped Limit 158-112 dBµA/m Pk
450 to 30,000 Hz: Negative Sloped Limit 112-74 dBµA/m Pk
30 to 150 kHz: Flat limit 74 dBµA/m Pk

Woodward Radiated Electric Field Emissions @ 1 meters
10 kHz to 100 MHz: Negative Sloped Limit 90-56 dBµV/m PK
100 MHz to 18 GHz: Positive Sloped Limit 56-102 dBµV/m PK

Woodward Radiated Magnetic to Electric Field Emissions @ 3m
150 kHz to 30 MHz Negative Sloped Limit 80 to 50 dBµV/m QP

Woodward Radiated Electric Field Emissions 3m
30-230 MHz Flat Limit 50 dBµV/m QP
230-1000 MHz Flat Limit 54 dBµV/m QP
1000-3000 MHz Flat Limit 76 dBµV/m PK & 54 dBµV/m AVE
3000-6000 MHz Flat Limit 80 dBµV/m PK & 54 dBµV/m AVE

Released

Appendix B.
MicroNet XT Hardware and Software Compatibility

IMPORTANT

- **Upgrading from one control platform to another typically requires hardware or CPU changes and a coder conversion.**
- **During upgrades, it is always recommended to verify that the system is using preferred hardware part numbers and current revisions to take advantage of any robustness improvements that have been made.**
- **When converting from older systems to the newer MicroNet XT family, MicroNet XT Coder 1.00 (or greater) must be used.**

WARNING

Lockout/Tagout
LOTO

Ensure that personnel are fully trained on LOTO procedures prior to attempting to replace or service equipment on a "live" running engine. All safety protective systems (overspeed, over temperature, overpressure, etc.) must be in proper operational condition prior to the start or operation of a running engine. Personnel should be equipped with appropriate personal protective equipment to minimize the potential for injury due to release of hot hydraulic fluids, exposure to hot surfaces and/or moving parts, or any moving parts that may be activated and are located in the area of control of the unit.

Coder and CPU Compatibility Matrix

Appendix Table B-1. Coder Compatibility with CPU Modules

	CPU Modules
Coder Version	MicroNet XT CPU (5466-1300)
Coder 1.0.0	●
Coder 1.0.1	●
Coder 1.1.0	●

Released

Appendix Table B-2. Coder Compatibility with Different Control Platforms

Control Platforms	Coder 1.0.0	Coder 1.0.1	Coder 1.1.0	Coder 1.1.1
MicroNet XT Simplex	●	●	●	●
MicroNet XT Redundant			●	●
Legacy Platforms				
MicroNet*				
MicroNet Plus*				
MicroNet TMR*				

*Legacy platforms are not compatible with the MicroNet XT coder

Appendix Table B-3. Module Compatibility Matrix

Module Compatibility	Simplex		Redundant		Notes
	Main	Exp	Main	Exp	
Chassis					
14 slot Chassis (5453-1219)	●	●	●	●	
Power Supplies					
XT Power Supply Low Voltage (5466-1320)	●	●	●	●	
CPU Modules					
XT Control CPU (5466-1300)	●		●		
XT Remote RTN (5466-1301)		●		●	
I/O Modules					
XT DIO 32/16 Module (5466-1304)	●	●	●	●	
XT Flex AIO Module (5466-1303)	●	●	●	●	
XT AIO 16/8 Module (5466-1309)	●	●	●	●	
XT RTD/TC 12 Module (5466-1306)	●	●	●	●	
XT ACT CTRL 2 Module (5466-1307	●	●	●	●	

Released

Appendix C. Acronyms

A

A	Ampere
AC	Alternating Current
Act	Actuator
A/D	Analog-to-Digital
AI	Analog Input
AIO	Analog Input/Output
App	Application
AO	Analog Output
ASTM	American Society of Testing and Materials
AWG	American Wire Gauge

B

Baud	Bits per Second (Data Transmission Rate)
BIOS	Basic I/O Software
BOM	Bill of Materials

C

CAN	Control Area Network
CAT	Category
COAX	Co-axial
cm	Centimeter
CE	Symbol representing compliance to the EU Directives
Ch	Channel
CJ	Cold Junction
CMRR	Common Mode Rejection Ratio
COM	Communication
CPU	Central Processor Unit
CPWR	Contact Power

D

dB	Decibel
DC	Direct Current
DCDT	Direct Current Differential Transformer
DCS	Distributed Control System
DLE	Dry Low Emissions
DI	Discrete Input
DIN	Deutsche Institut für Normung
DIO	Discrete Input/Output
DOUT	Discrete Output
DPDT	Double Pole/Double Throw
DRAM	Dynamic Random Access Memory
DSP	Digital Signal Processor

E

EIA	Electronic Industry Alliance
EMC	Electromagnetic Compatibility
EMI	Electromagnetic Interference
EN	Europäische norm (European Norm)
ESD	Electrostatic Discharge
EU	European Union

F

FDBK	Feedback
FET	Field Effect Transmitter
FS	Full Scale
FTM	Field Termination Module

G

Released

G	Force of Gravity
GAP	Woodward Graphical Application Program(mer)
GND	Ground

H

HMI	Human Machine Interface
Hz	Hertz (cycles per second)
HD	High Density
HV	High Voltage
HVAC	High Voltage Alternating Current

I

IEC	International Electro technical Commission
IEEE	Institute of Electronic & Electrical Engineers
I/O	Input/Output
IOLOCK	I/O Control Signal on MicroNet XT Motherboard
IP	Ingress Protection or Internet Protocol, depending on context
ISO	International Standards Organization

L

LED	Light Emitting Diode
LPWR	Analog Input Loop Power
LV	Low Voltage
LVD	Low Voltage Directive
LVDT	Linear Variable Differential Transformer

M

mA	Milliampere
MAC	Media Access Control
Max	Maximum
Mbps	Million Bits per Second
MFT	Minor Frame Timer
Min	Minimum
MPU	Magnetic Pick-up
ms	Millisecond
MSDS	Material Safety Data Sheet
mV	Millivolt
MUX	Multiplex(er)

N

NEC	(US) National Electrical Code
NIC	Network Interface Controller
NV	Non-volatile

O

OPC	OLE for Process Control (Communication Protocol)
OS	Operating System
O/S	Overspeed

P

PC	Personal Computer
PCB	Printed Circuit Board
PE	Protective Earth
PPE	Personal Protective Equipment
PPM	Parts Per Million
PROX	Proximity Probe
PS	Power Supply
PWM	Pulse Width Modulation

Q

QT	Software for creating Graphical User Interfaces

R

RAM	Random Access Memory
RCJS	Remote Cold Junction Sensor

Released

RDBK	Analog Output Readback
RPWR	Relay Power
RTD	Resistance Temperature Device
RTN	Real Time Network
RVDT	Rotary Variable Differential Transformer
Rx	Receive

S

SAE	Society of Automotive Engineers
Shld	Shield
Simplex	Control scheme that utilizes one core processor
SIO	Serial Input/Output
SPDT	Single Pole/Double Throw
SSTP	Secure Socket Tunneling Protocol
STP	Shielded Twisted Pair
SYSCON	System Controller

T

TC	Thermocouple
TCP/IP	Transmission Control Protocol/Internet Protocol
THD	Total Harmonic Distortion
TMR	Triple Modular Redundant
Tx	Transmit

U

USB	Universal Serial Bus
UART	Universal Asynchronous Receive/Transmit
UL	Underwriters Laboratories

V

VAC	Volts ac (Alternating Current)
VDC	Volts dc (Direct Current)
VDT	Variable Differential Transformer
VRMS	Volts RMS (root mean square)

W

W	Watt

X

Xcvr	Transceiver
Xdcr	Transducer
XTN	XT Real Time Network

Other

µA	Microampere

Released

Revision History

Revision B

- Included new features for redundancy and expansion chassis
- Included newly released module information

Revision A

- Added Intertek safety standards to Regulatory Compliance
- Minor corrections to Table 7-3

Revision -

- New manual

Released

Declarations

EU DECLARATION OF CONFORMITY

EU DoC No.:	00657-EU-02-01
Manufacturer's Name:	WOODWARD INC.
Manufacturer's Contact Address:	1041 Woodward Way, Fort Collins, CO 80524 USA
Model Name:	Micronet XT
The object of the declaration described above is in conformity with the following relevant Union harmonization legislation:	Directive 2014/34/EU of the European Parliament and of the Council of 26 February 2014 on the harmonization of the laws of the Member States relating to equipment and protective systems intended for use in potentially explosive atmospheres (ATEX) Directive 2014/30/EU of the European Parliament and of the Council of 26 February 2014 on the harmonization of the laws of the Member States relating to electromagnetic compatibility (EMC) and all applicable amendments. Directive 2014/35/EU of the European Parliament and of the Council of 26 February 2014 on the harmonization of the laws of the Member States relating to the making available on the market of electrical equipment designed for use within certain voltage limits (LVD)
Markings in addition to CE marking:	Ⓔx II 3 G Ex ec IIC T4 Gc
Applicable Standards:	
ATEX:	EN IEC 60079-0:2018 Explosive atmospheres - Part 0: Equipment - General requirements EN 60079-7:2015, EN IEC 60079-7:2015/A1:2018 Explosive atmospheres - Part 7: Equipment protection by increased safety
EMC:	EN 61000-6-4:2007/A1:2011, IEC EN 61000-6-4:2019 Electromagnetic compatibility (EMC) - Part 6-4: Generic standards - Emission standard for industrial environments EN 61000-6-2:2005/AC:2005, IEC EN 61000-6-2:2019 Electromagnetic compatibility (EMC) - Part 6-2: Generic standards - Immunity for industrial environments EN 61000-6-5:2015/AC:2018 Electromagnetic compatibility (EMC) - Part 6-5: Generic standards - Immunity for equipment used in power station and substation environment
LVD:	EN 61010-1:2010, EN 61010-1:2010/A1:2019/AC:2019-04, EN 61010-1:2010/A1:2019, EN IEC 61010-2-201:2018 Safety requirements for electrical equipment for measurement, control, and laboratory use - Part 1: General requirements

This declaration of conformity is issued under the sole responsibility of the manufacturer
We, the undersigned, hereby declare that the equipment specified above conforms to the above Directive(s).

MANUFACTURER

Signature	Annette Lynch
Full Name	**Annette Lynch**
Position	**Engineering Manager**
Place	**Woodward, Fort Collins, CO, USA**
Date	27-September-2024

Page 1 of 1

5-09-1183 Rev 41

Released

We appreciate your comments about the content of our publications.

Send comments to: industrial.support@woodward.com

Please reference publication 35219V1.

PO Box 1519, Fort Collins CO 80522-1519, USA
1041 Woodward Way, Fort Collins CO 80524, USA
Phone +1 (970) 482-5811

Email and Website—www.woodward.com

Woodward has company-owned plants, subsidiaries, and branches, as well as authorized distributors and other authorized service and sales facilities throughout the world.

Complete address / phone / fax / email information for all locations is available on our website.